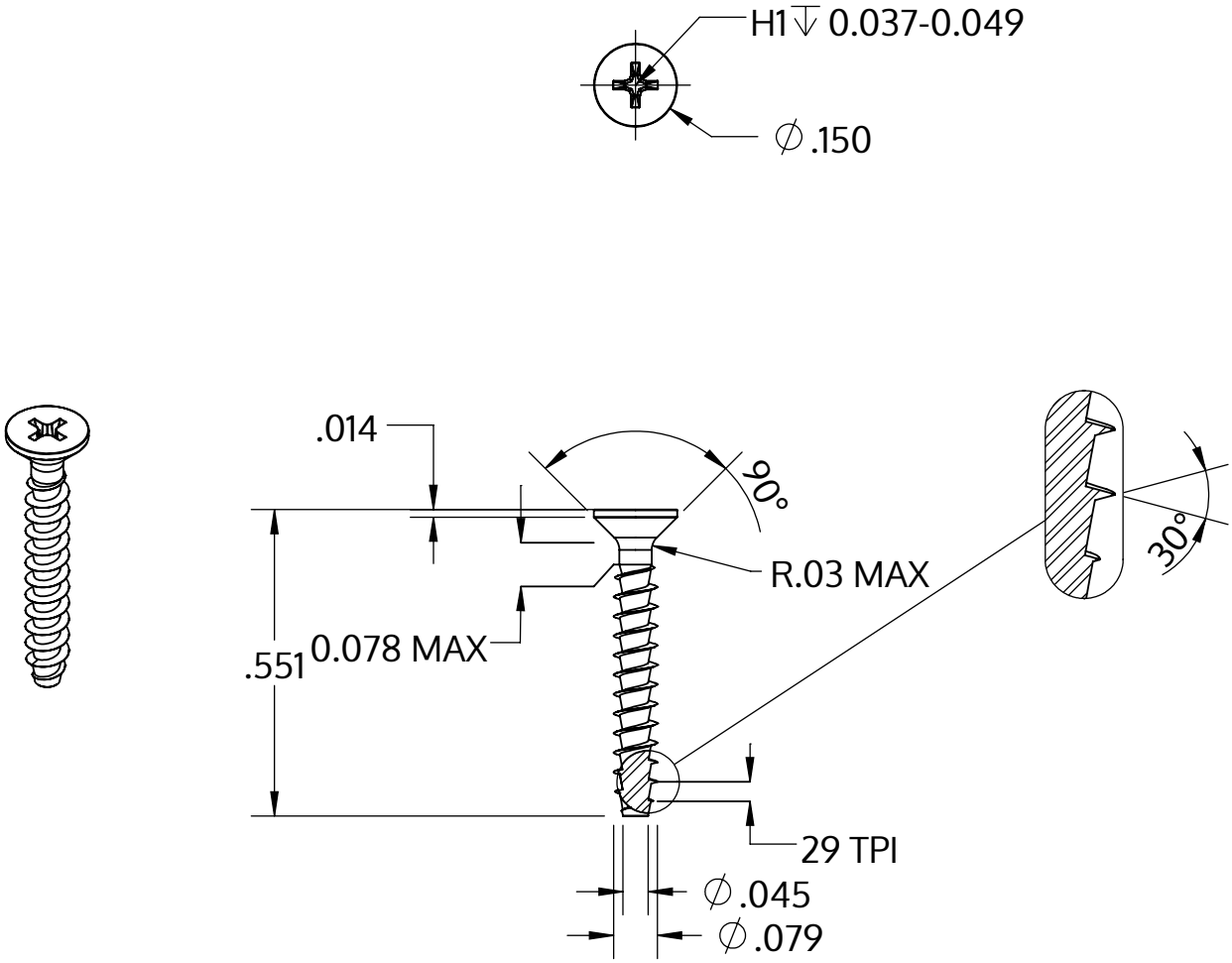

Metric size	M2 x 0.89 mm
US size (converted)	#1.5-29
	Tolerances [inch]
Length	+/- 0.021
Head diameter	+0 / -0.011
Head height	
Thread diameter	+0.005 / -0

Description	STP33A 2.0x14.0 - H1
Material	stainless-steel A2
Surface	bright, pickled and passivated
Weight	0.251 kg / 1000 pieces

SCREWERK	**STP33A0200140E**	
Inch Drawing Size A	Scale 3:1	2024-10