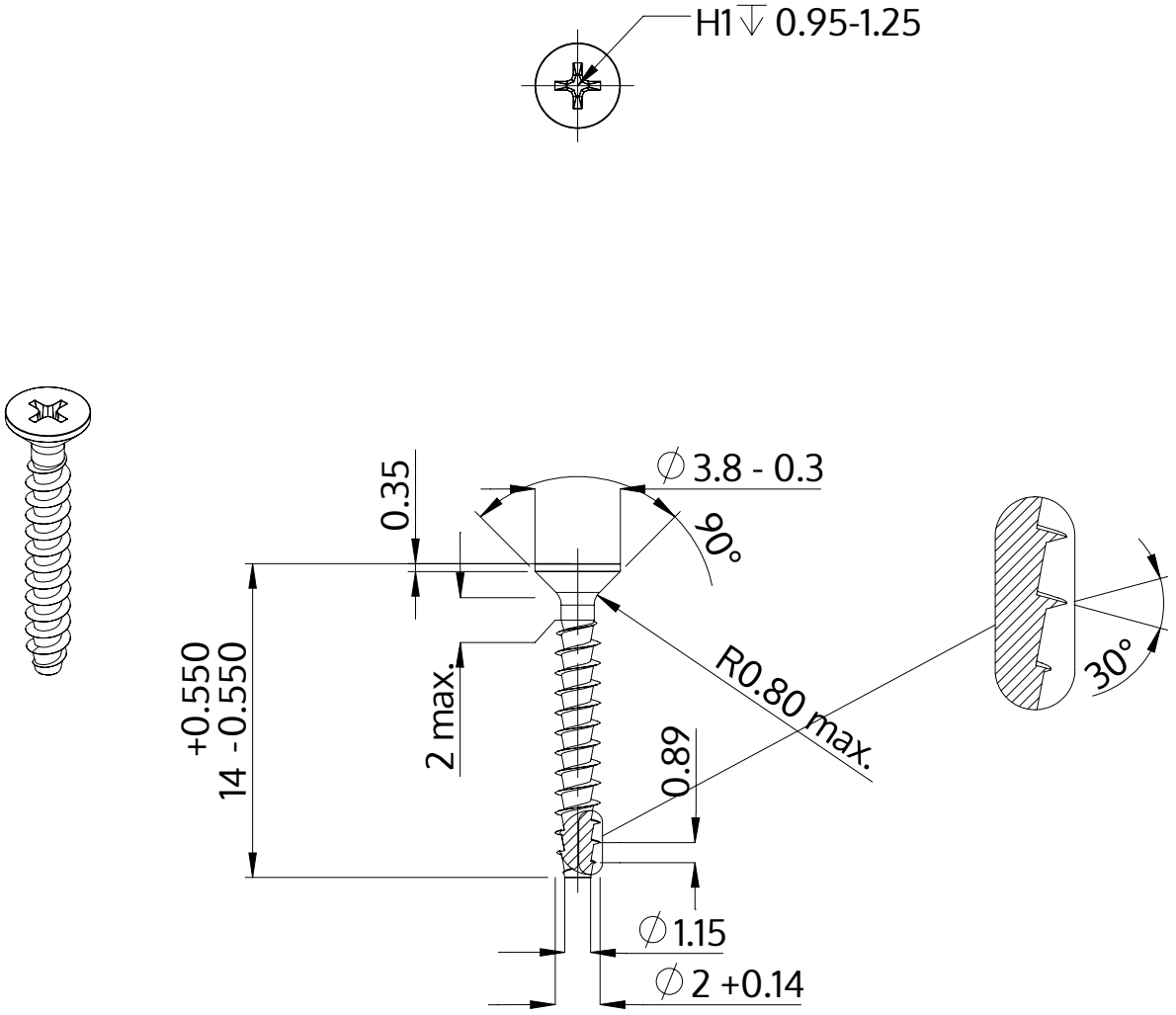

Description	STP33A 2.0x14.0 - H1
Material	stainless-steel A2
Surface	bright, pickled and passivated
Weight	0.251 kg / 1000 pieces

SCREWERK	**STP33A0200140E**	
Metric Drawing A4	Scale 3:1	2024-10