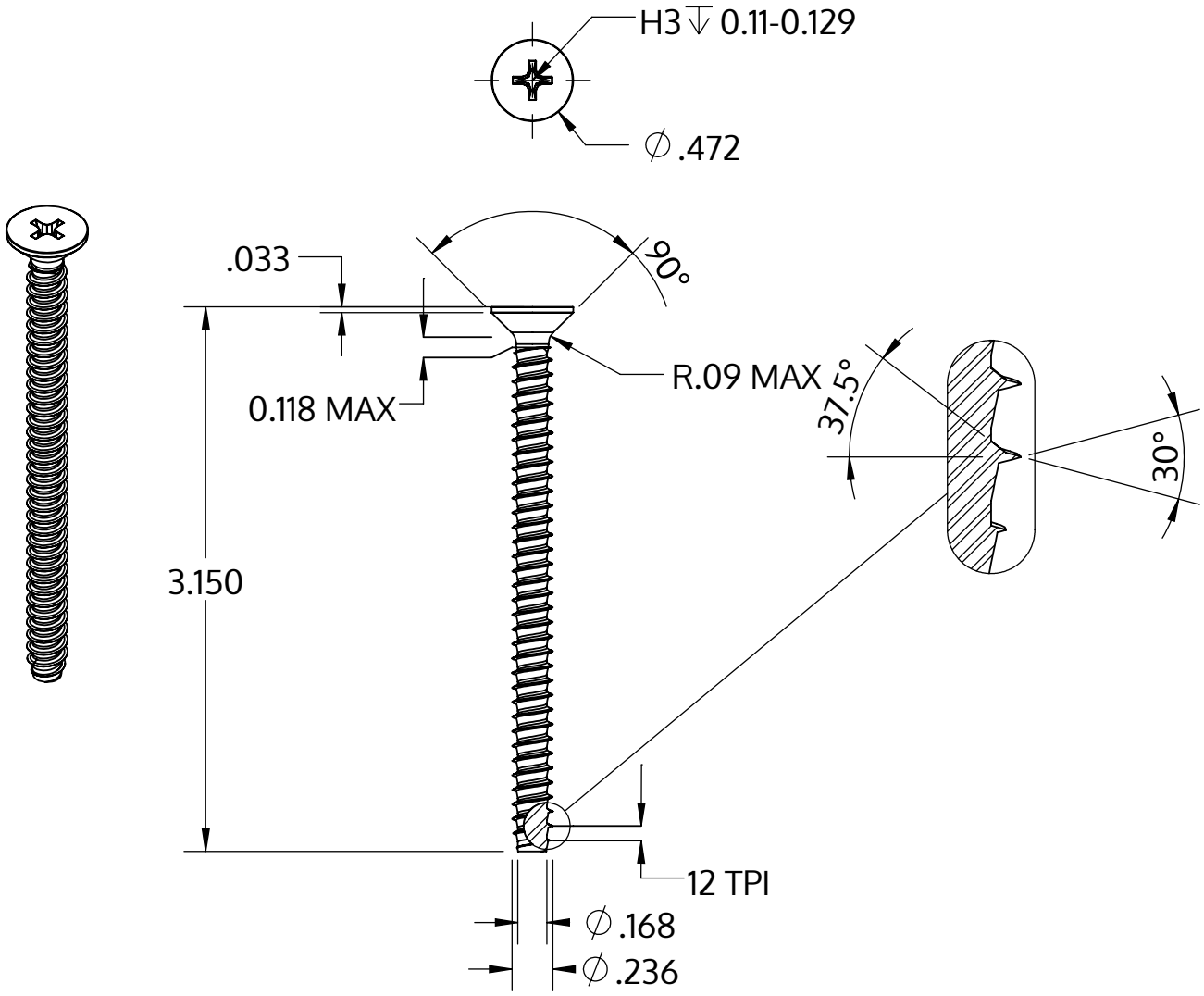


| | |
|---|---|
| Metric size | M6 x 2.14 mm |
| US size (converted) | #0.236-12 |
| | Tolerances [inch] |
| Length | +/- 0.037 |
| Head diameter | +0 / -0.016 |
| Head height | |
| Thread diameter | +0.005 / -0 |

| | |
|---|---|
| Description | STP33 6.0x80.0 - H3 |
| Material | steel, hardened |
| Surface | Zinc-Nickel-plated min. 5µm, passivated black/ Cr-VI-free, baked, sealed |
| Weight | 12.212 kg / 1000 pieces |

| | | |
|---|---|---|
| SCREWERK | **STP330600800B** | |
| Inch Drawing Size A | Scale 1:1 | 2024-10 |