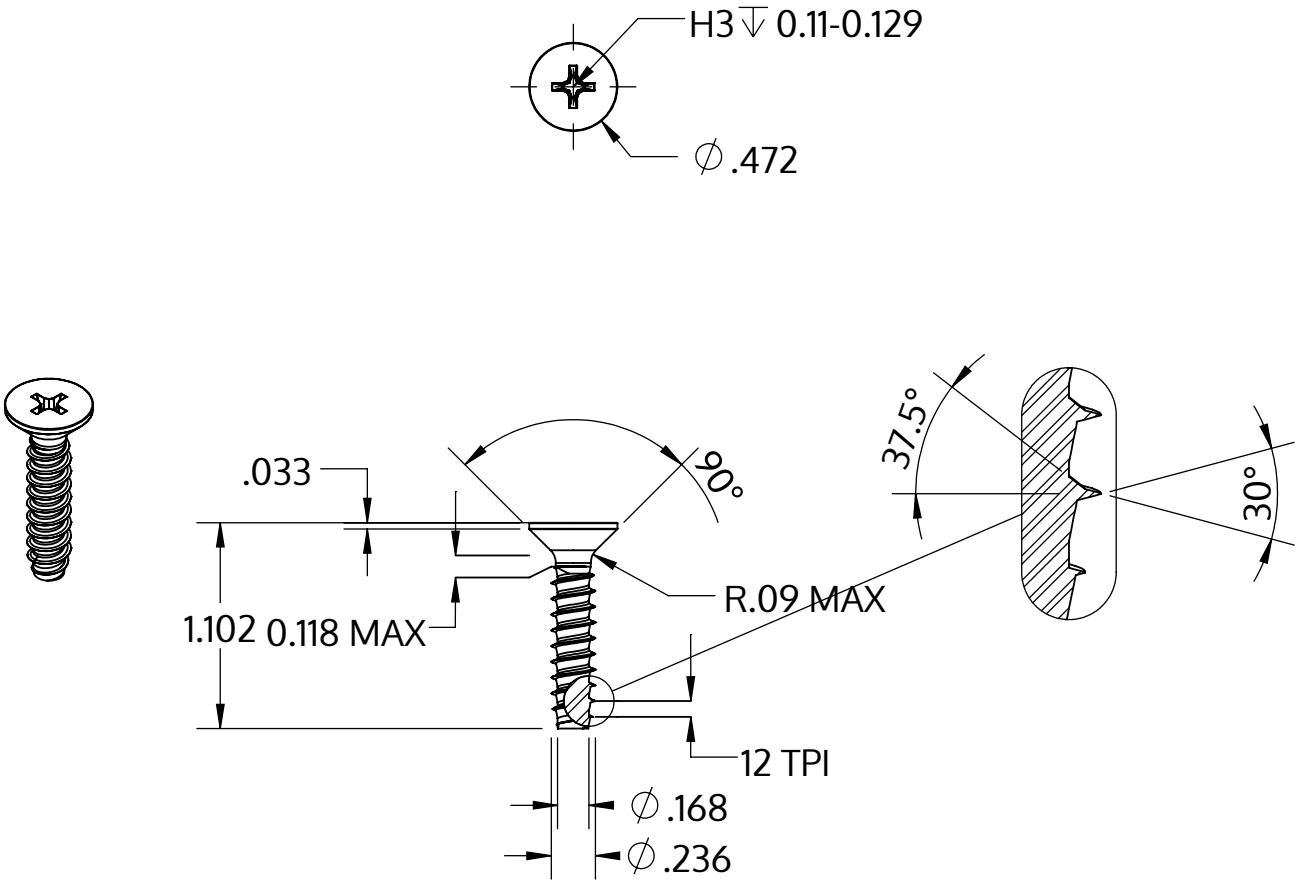


| | |
|---|---|
| Metric size | M6 x 2.14 mm |
| US size (converted) | #0.236-12 |
| | Tolerances [inch] |
| Length | +/- 0.025 |
| Head diameter | +0 / -0.016 |
| Head height | |
| Thread diameter | +0.005 / -0 |

| | |
|---|---|
| Opis | STP33 6.0x28.0 - H3 |
| Materiał | Stal, hartowana |
| Powierzchnia | Ocynkowana 5-7 µm, temperowana, pasywowana na niebiesko |
| Waga | 5.158 kg / 1000 sztuk |

| | | |
|---|---|---|
| SCREWERK | **STP330600280S** | |
| _Zoll Zeichnung Größe A | Skala 1:1 | 2024-10 |