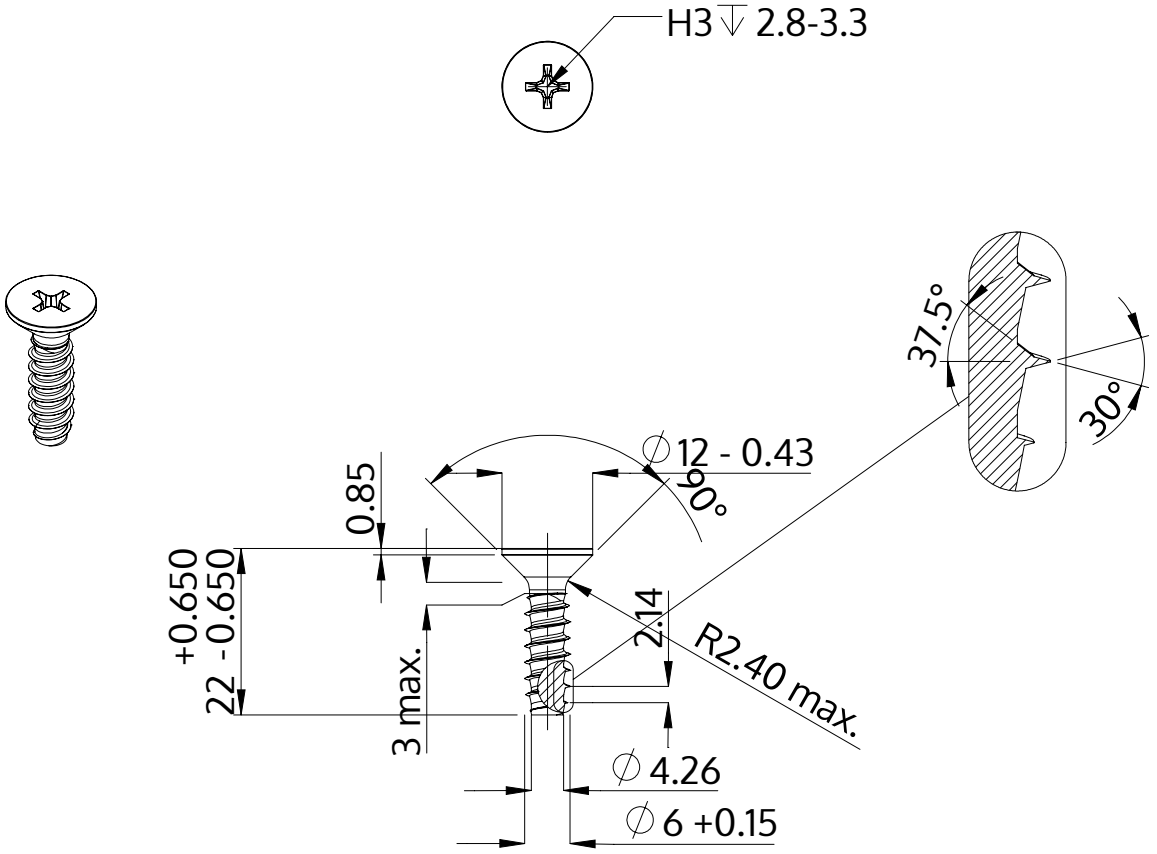

Description	STP33 6.0x22.0 - H3
Material	stainless steel A4
Surface	bright, pickled and passivated
Weight	4.344 kg / 1000 pieces

SCREWERK	**STP330600220C**	
Metric Drawing A4	Scale 1:1	2024-10