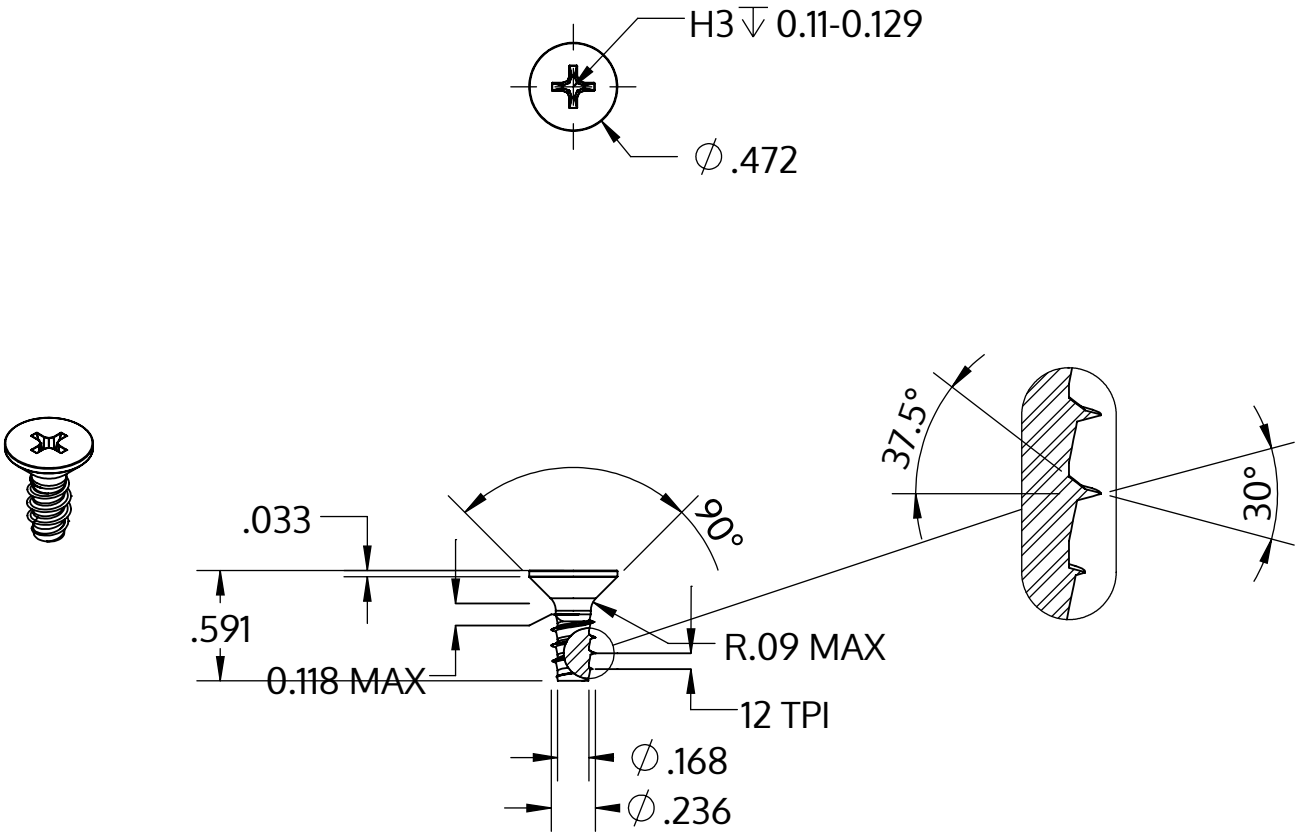

Metric size	M6 x 2.14 mm
US size (converted)	#0.236-12
	Tolerances [inch]
Length	+/- 0.021
Head diameter	+0 / -0.016
Head height	
Thread diameter	+0.005 / -0

Descriere	STP33 6.0x15.0 - H3
Material	oțel, călit
Exterior	zincat, Nichelat, pasivat negru / nu conține Cr-VI, recopt, ermetizat
Greutate	3.395 kg / 1000 unități

SCREWERK	**STP330600150B**	
_Zoll Zeichnung Größe A	Scalarea 1:1	2024-10