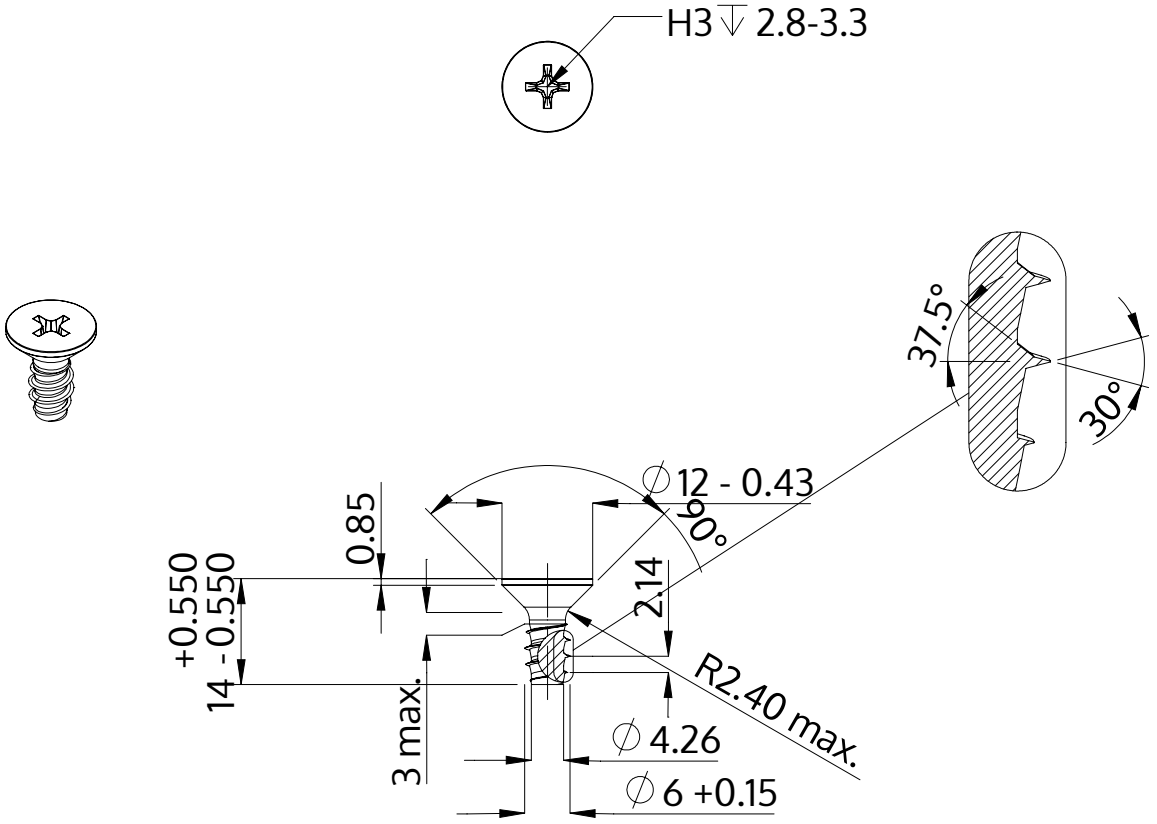

Description	STP33 6.0x14.0 - H3
Material	stainless-steel A2
Surface	bright, pickled and passivated
Weight	3.259 kg / 1000 pieces

SCREWERK	**STP330600140E**	
Metric Drawing A4	Scale 1:1	2024-10