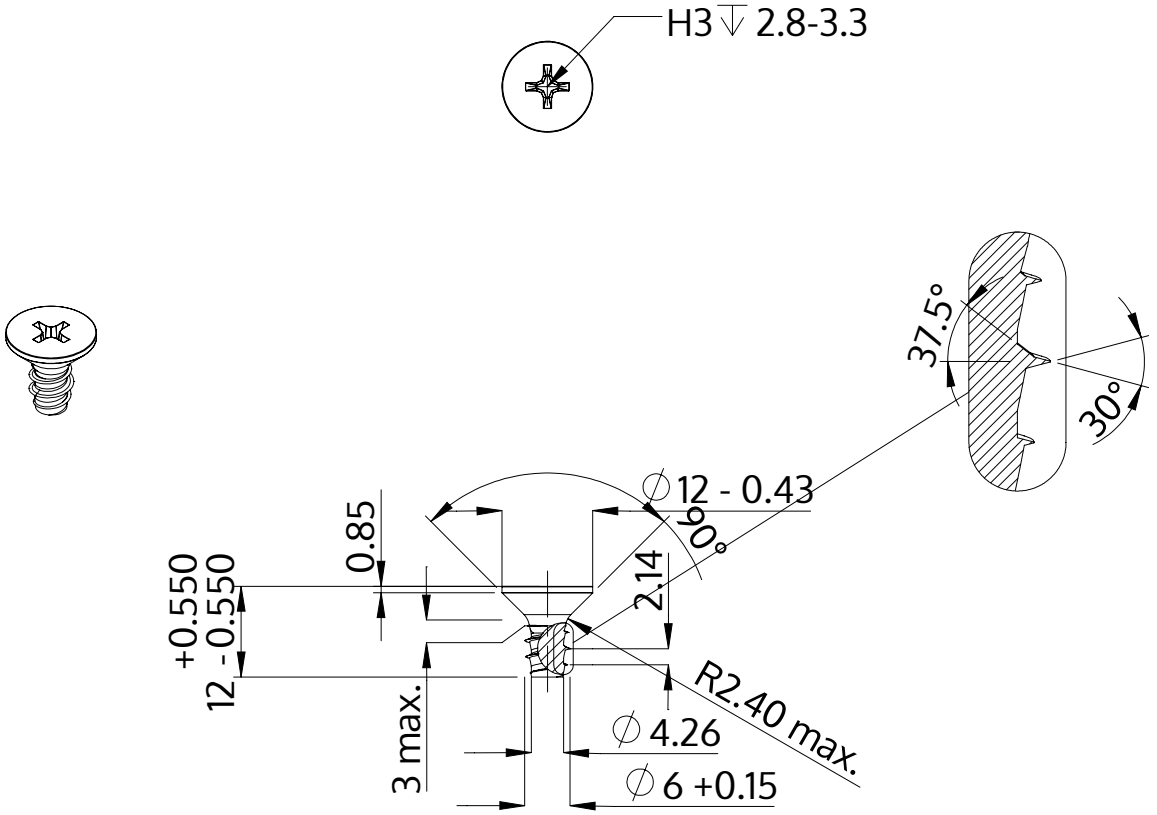

Description	STP33 6.0x12.0 - H3
Material	stainless steel A4
Surface	bright, pickled and passivated
Weight	2.988 kg / 1000 pieces

SCREWERK	**STP330600120C**	
Metric Drawing A4	Scale None:1	2024-04