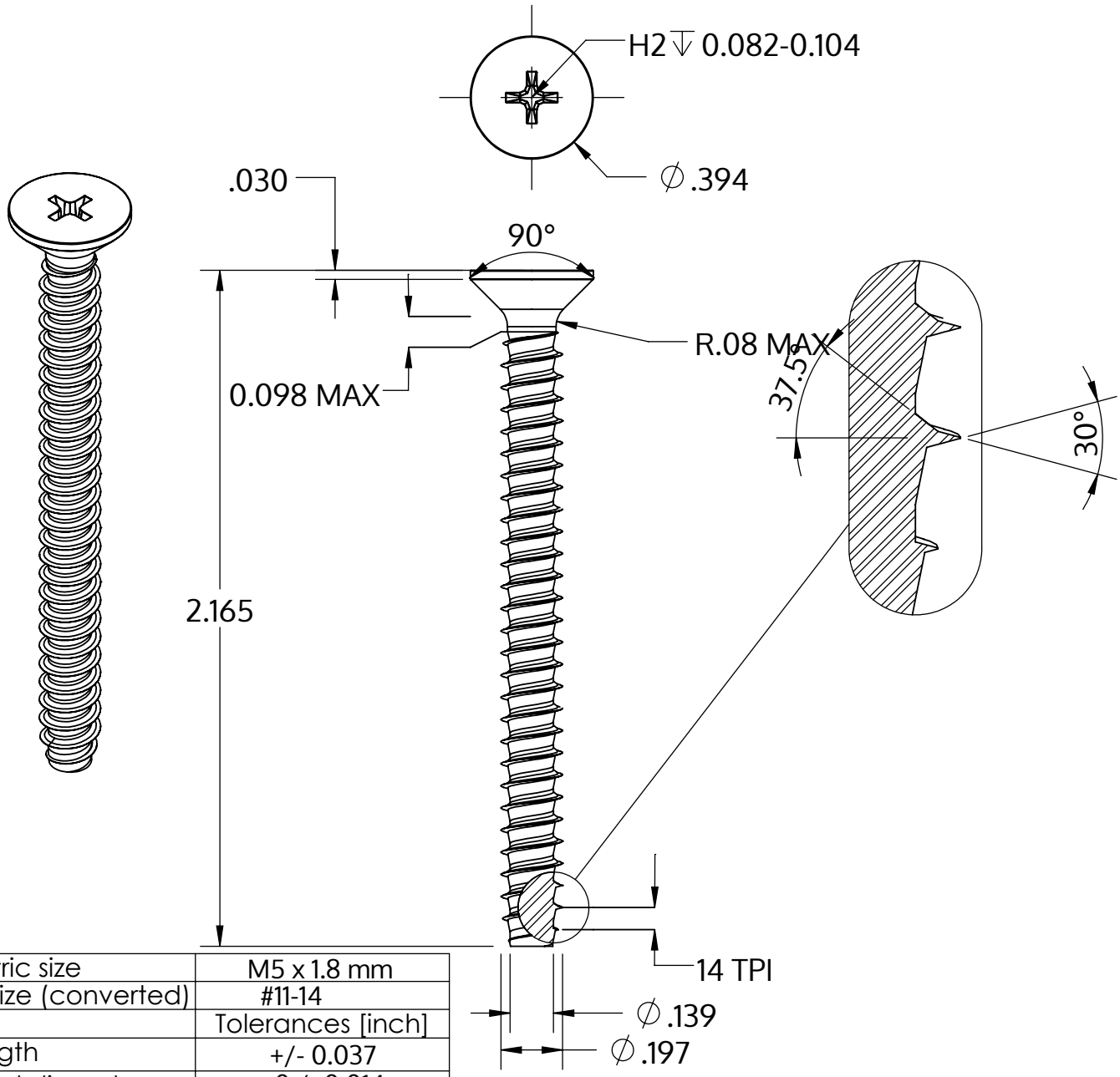

Metric size	M5 x 1.8 mm
US size (converted)	#11-14
	Tolerances [inch]
Length	+/- 0.037
Head diameter	+0 / -0.014
Head height	
Thread diameter	+0.005 / -0

Description	STP33 5.0x55.0 - H2
Material	steel, hardened
Surface	Zinc-Nickel-plated min. 5µm, passivated black/ Cr-VI-free, baked, sealed
Weight	6.066 kg / 1000 pieces

SCREWERK	**STP330500550B**	
Inch Drawing Size A	Scale 2:1	2024-10