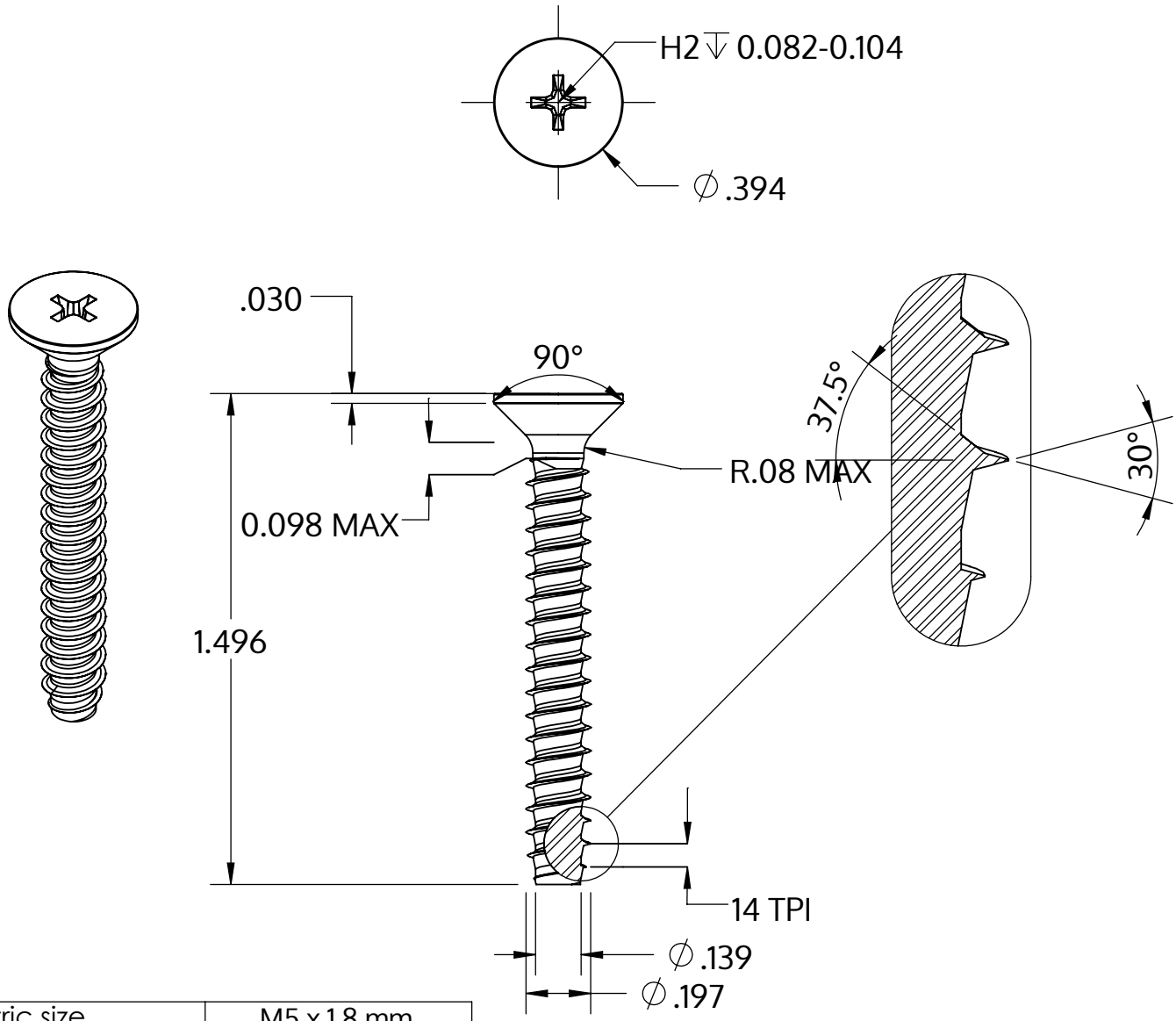

Metric size	M5 x 1.8 mm
US size (converted)	#11-14
	Tolerances [inch]
Length	+/- 0.031
Head diameter	+0 / -0.014
Head height	
Thread diameter	+0.005 / -0

Description	STP33 5.0x38.0 - H2
Material	stainless steel A4
Surface	bright, pickled and passivated
Weight	4.457 kg / 1000 pieces

SCREWERK

STP330500380C

Inch Drawing Size A	Scale None:1	2024-04