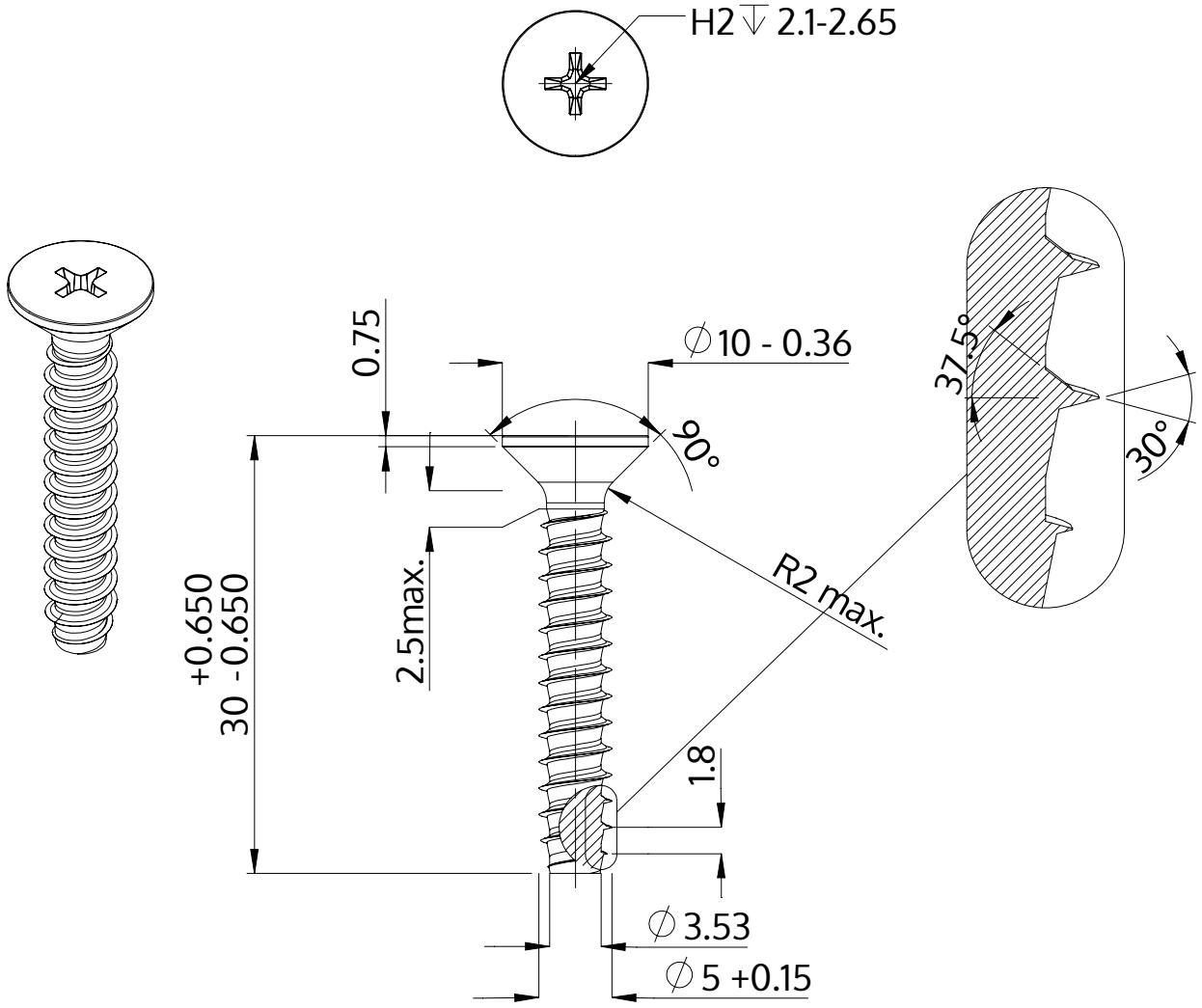


| | |
|---|---|
| Description | STP33 5.0x30.0 - H2 |
| Material | stainless steel A4 |
| Surface | bright, pickled and passivated |
| Weight | 3.701 kg / 1000 pieces |

| | | |
|---|---|---|
| SCREWERK | **STP330500300C** | |
| Metric Drawing A4 | Scale 2:1 | 2024-10 |