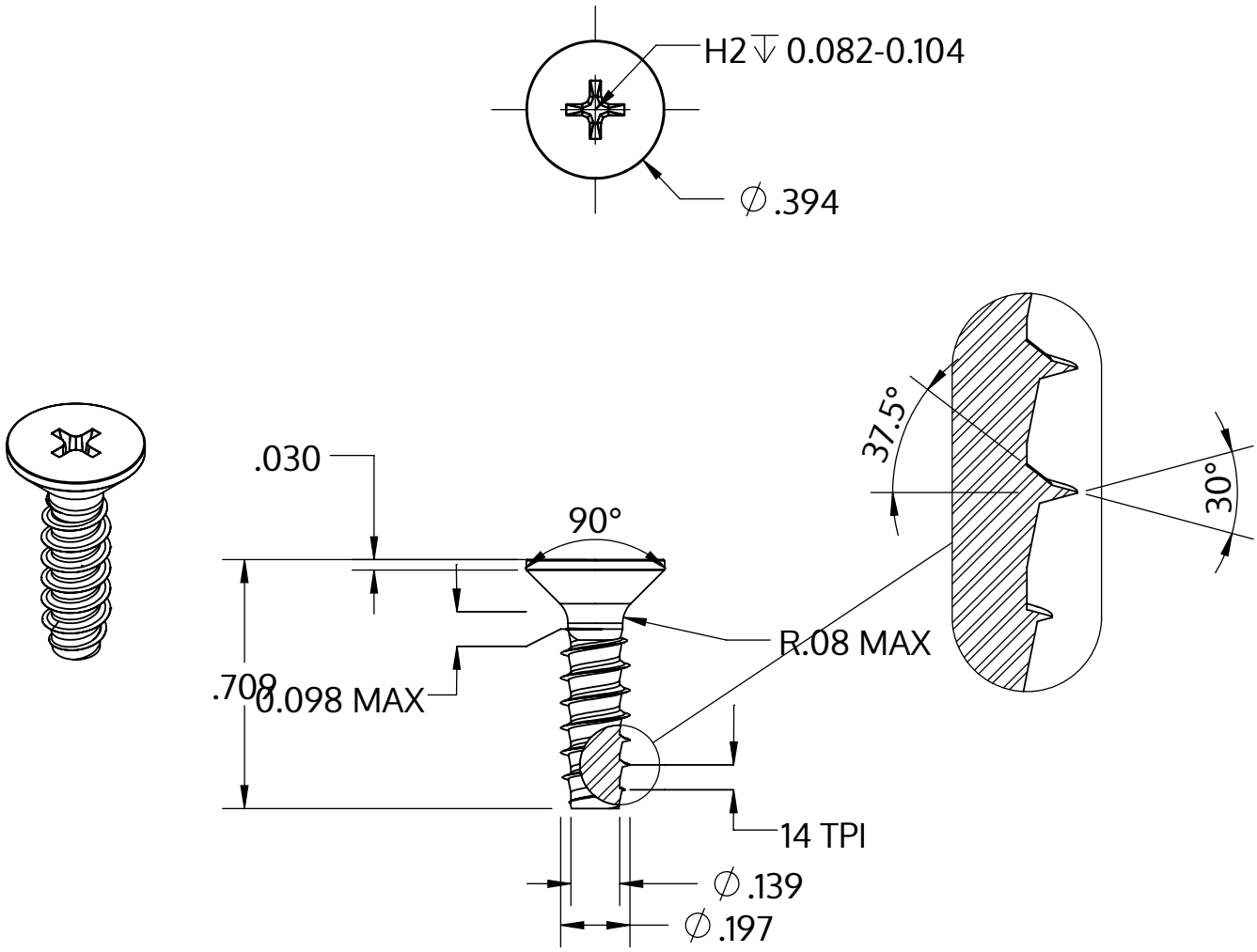

Metric size	M5 x 1.8 mm
US size (converted)	#11-14
	Tolerances [inch]
Length	+/- 0.021
Head diameter	+0 / -0.014
Head height	
Thread diameter	+0.005 / -0

Descriere	STP33 5.0x18.0 - H2
Material	oțel, călit
Exterior	zincat, Nichelat, pasivat negru / nu conține Cr-VI, recopt, ermetizat
Greutate	2.565 kg / 1000 unități

SCREWERK	**STP330500180B**	
_Zoll Zeichnung Größe A	Scalarea 2:1	2024-10