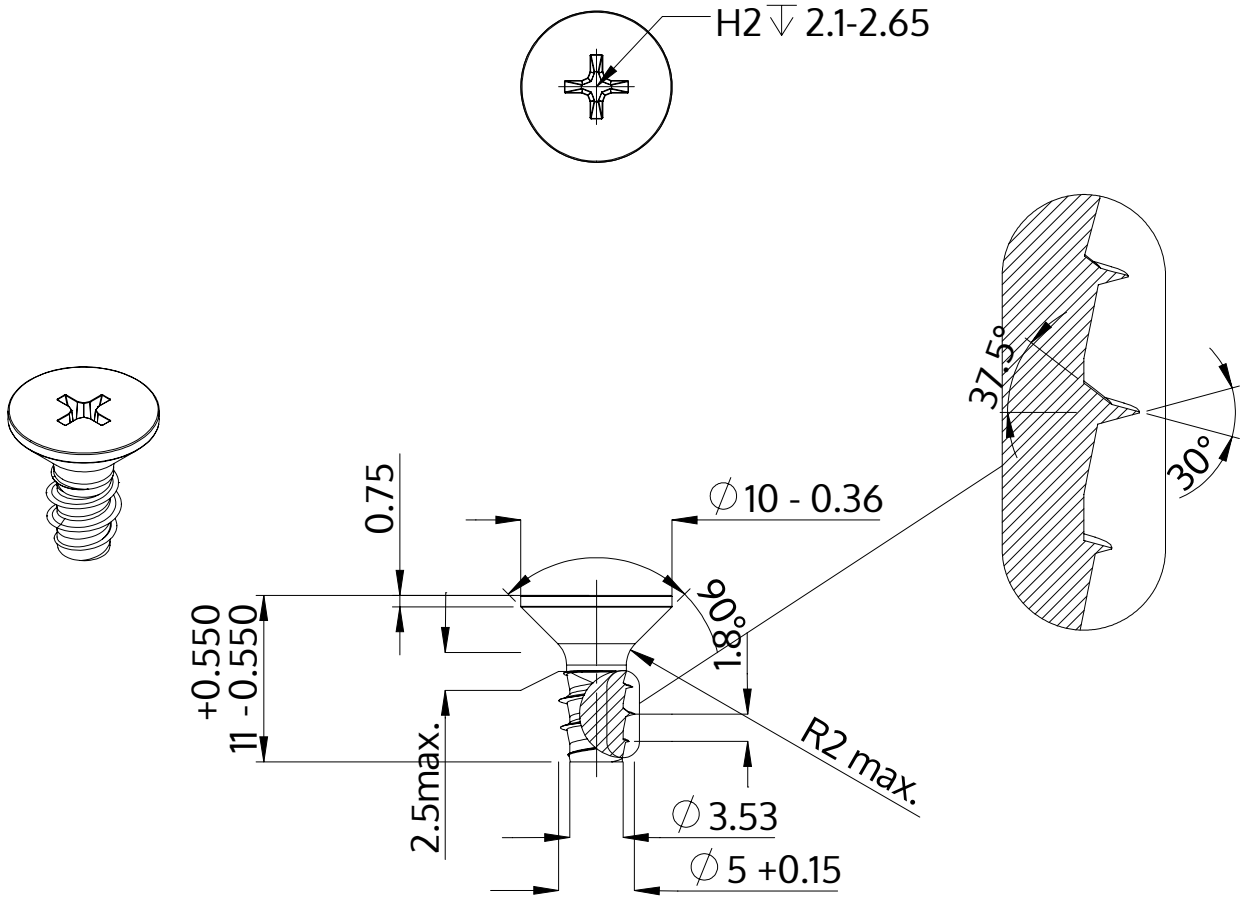

Description	STP33 5.0x11.0 - H2
Material	steel, hardened
Surface	Zinc-Nickel-plated min. 5µm, passivated black/ Cr-VI-free, baked, sealed
Weight	1.903 kg / 1000 pieces

SCREWERK	**STP330500110B**	
Metric Drawing A4	Scale None:1	2024-04