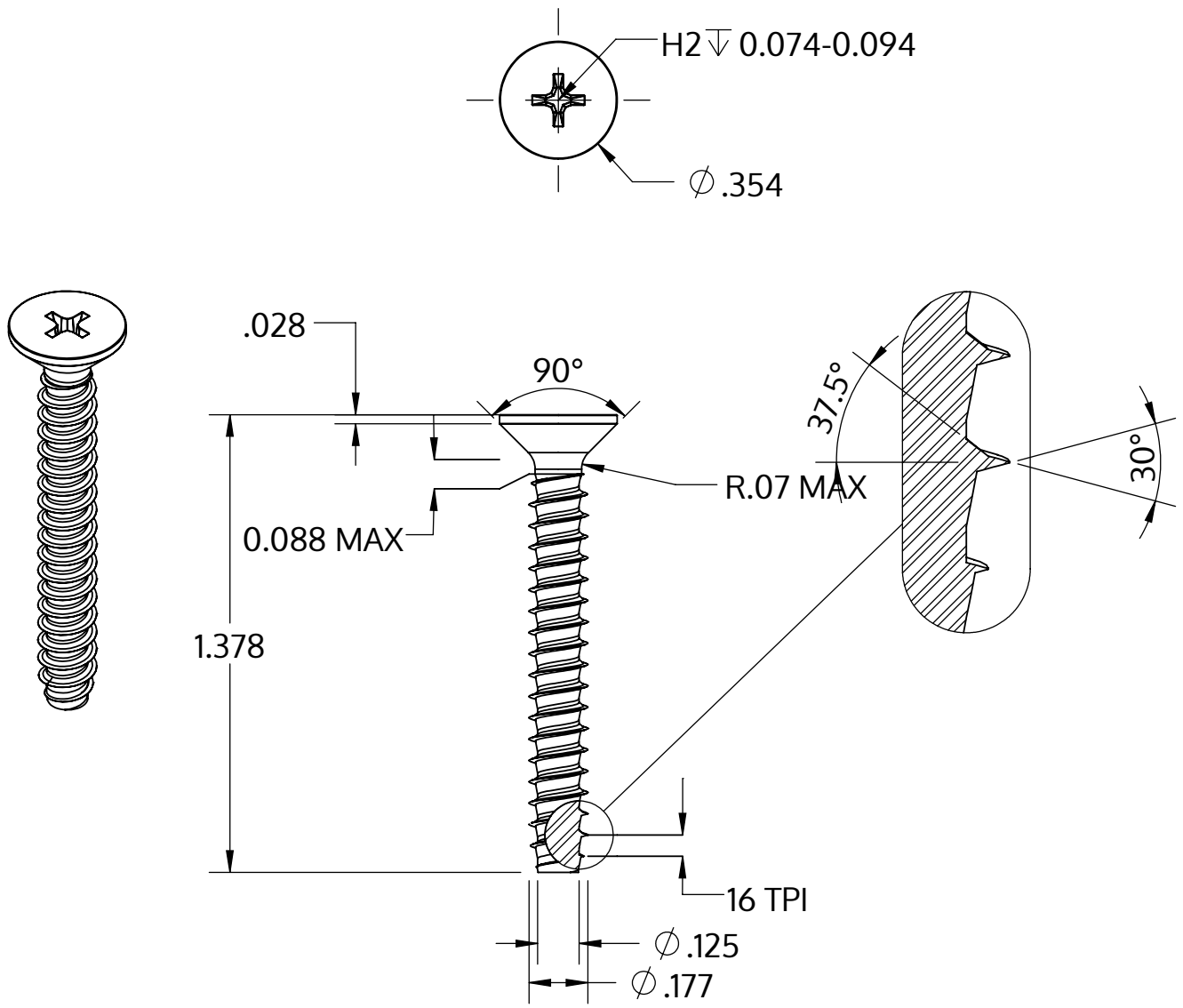

Metric size	M4.5 x 1.63 mm
US size (converted)	#9.5-16
	Tolerances [inch]
Length	+/- 0.031
Head diameter	+0 / -0.014
Head height	
Thread diameter	+0.003 / -0

Descriere	STP33 4.5x35.0 - H2
Material	oțel, călit
Exterior	zincat, Nichelat, pasivat negru / nu conține Cr-VI, recopt, ermetizat
Greutate	3.301 kg / 1000 unități

SCREWERK	**STP330450350B**	
_Zoll Zeichnung Größe A	Scalarea 2:1	2024-10