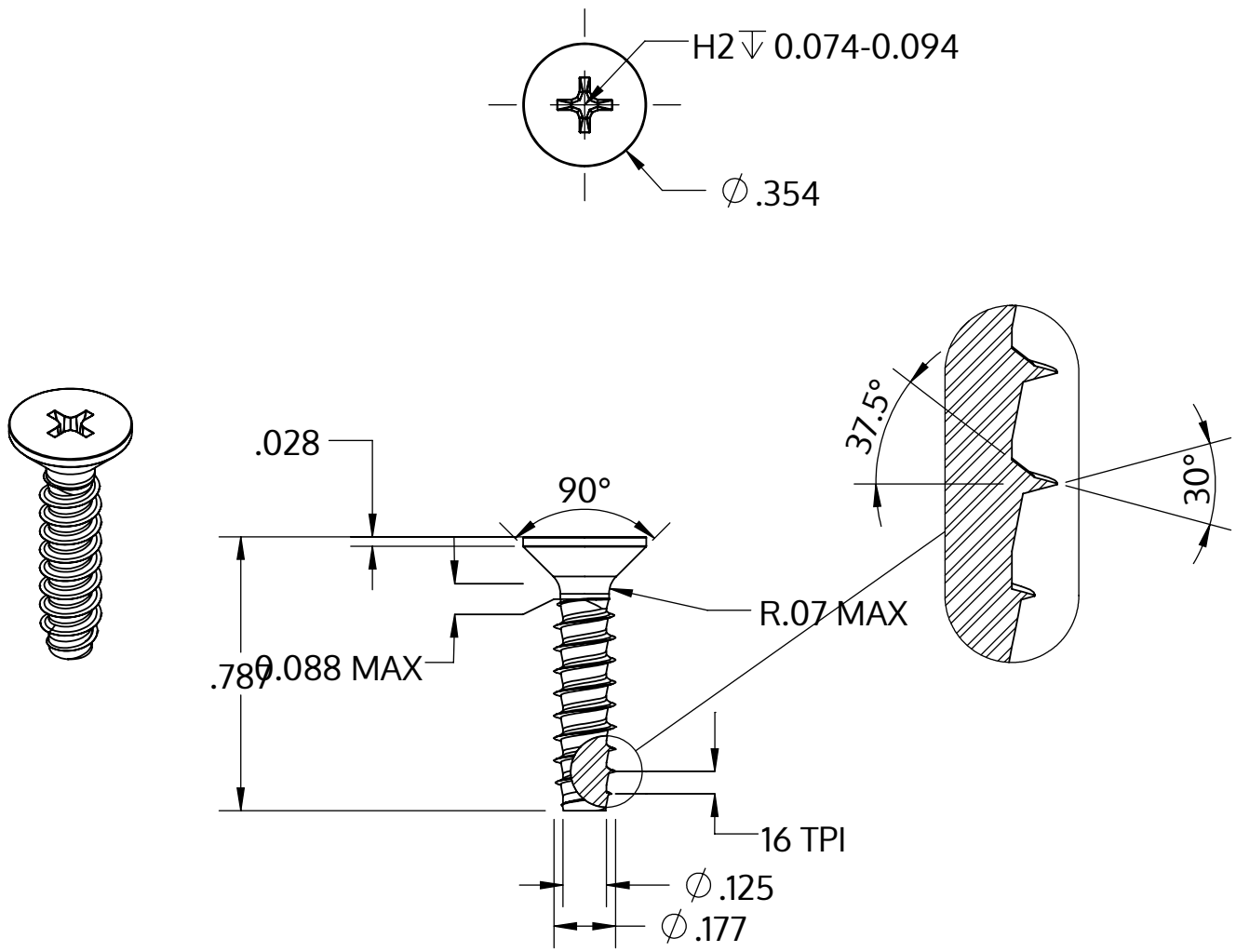

Metric size	M4.5 x 1.63 mm
US size (converted)	#9.5-16
	Tolerances [inch]
Length	+/- 0.025
Head diameter	+0 / -0.014
Head height	
Thread diameter	+0.003 / -0

Description	STP33 4.5x20.0 - H2
Material	steel, hardened
Surface	zinc-plated 5-7 µm, baked, blue / transparent passivated
Weight	2.148 kg / 1000 pieces

SCREWERK	**STP330450200S**	
Inch Drawing Size A	Scale 2:1	2024-10