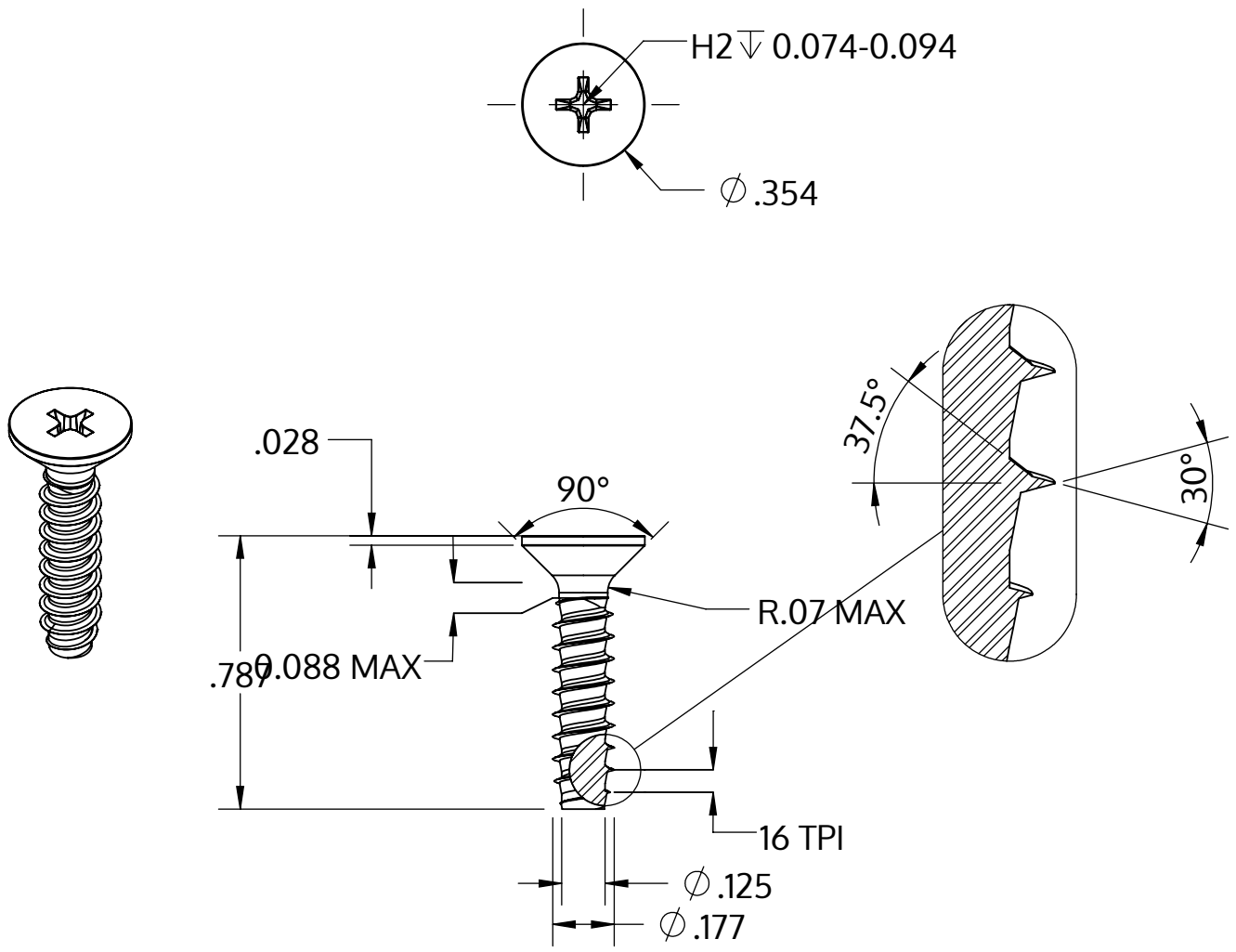


| | |
|---|---|
| Metric size | M4.5 x 1.63 mm |
| US size (converted) | #9.5-16 |
| | Tolerances [inch] |
| Length | +/- 0.025 |
| Head diameter | +0 / -0.014 |
| Head height | |
| Thread diameter | +0.003 / -0 |

| | |
|---|---|
| Descriere | STP33 4.5x20.0 - H2 |
| Material | oțel, călit |
| Exterior | zincat, Nichelat, pasivat negru / nu conține Cr-VI, recopt, ermetizat |
| Greutate | 2.148 kg / 1000 unități |

| | | |
|---|---|---|
| SCREWERK | **STP330450200B** | |
| _Zoll Zeichnung Größe A | Scalarea 2:1 | 2024-10 |