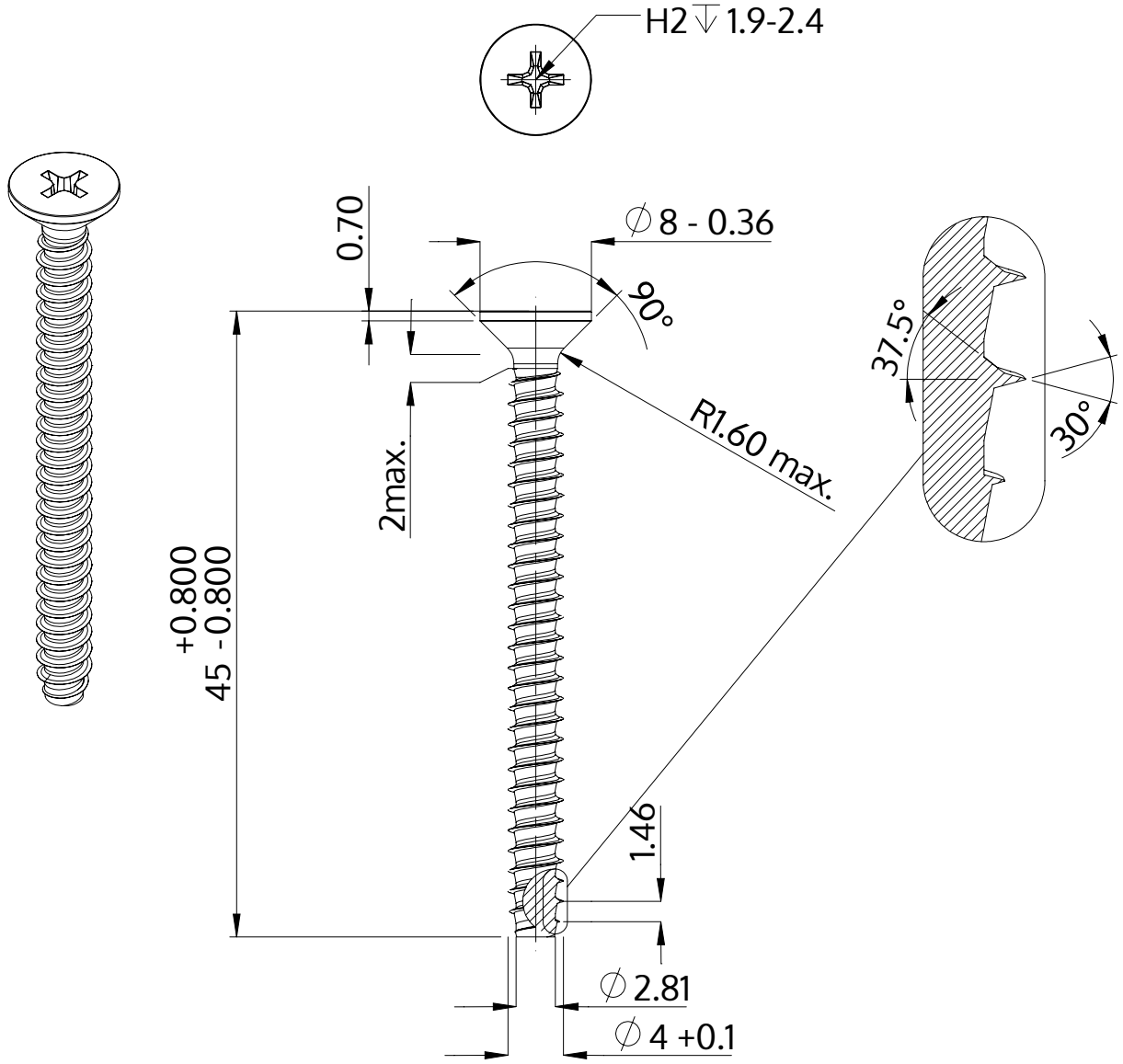

Description	STP33 4.0x45.0 - H2
Material	stainless-steel A2
Surface	bright, pickled and passivated
Weight	3.105 kg / 1000 pieces

SCREWERK	**STP330400450E**	
Metric Drawing A4	Scale None:1	2024-04