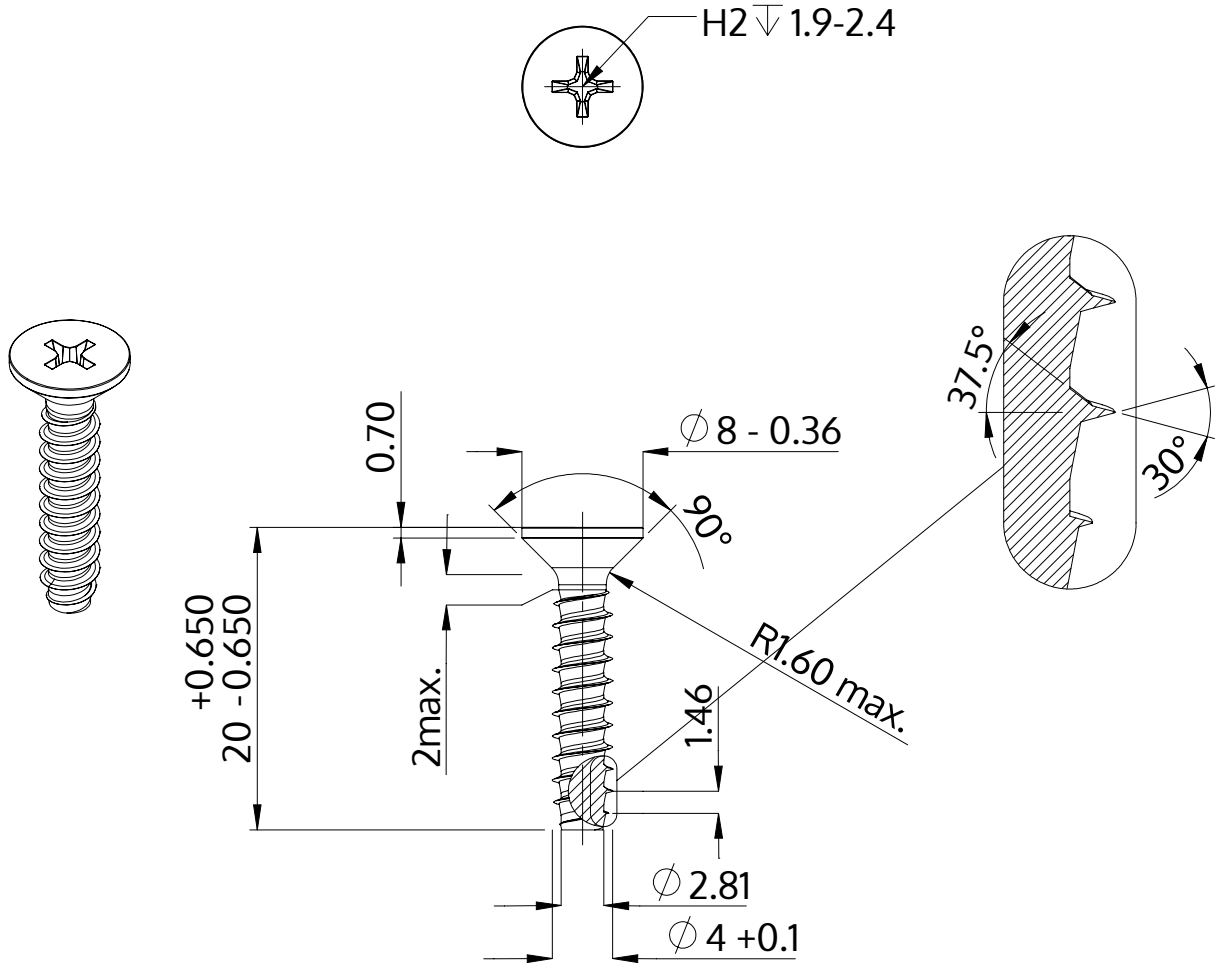

Description	STP33 4.0x20.0 - H2
Material	stainless-steel A2
Surface	bright, pickled and passivated
Weight	1.584 kg / 1000 pieces

SCREWERK	**STP330400200E**	
Metric Drawing A4	Scale 2:1	2024-10