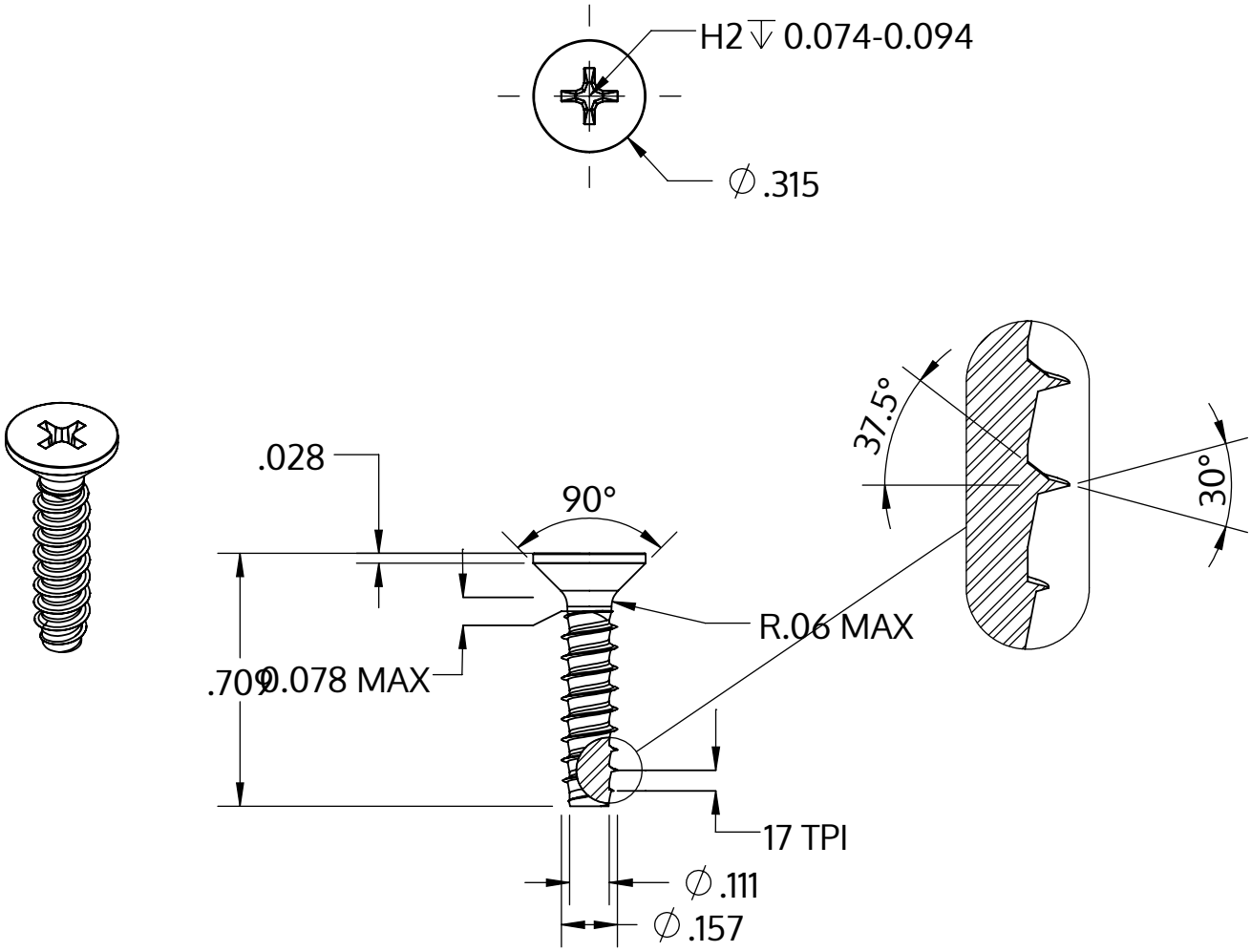

Metric size	M4 x 1.46 mm
US size (converted)	#8-17
	Tolerances [inch]
Length	+/- 0.021
Head diameter	+0 / -0.014
Head height	
Thread diameter	+0.003 / -0

Descriere	STP33 4.0x18.0 - H2
Material	oțel, călit
Exterior	zincat 5-7 µm, recopt, pasivat transparent/albastru
Greutate	1.462 kg / 1000 unități

SCREWERK	**STP330400180S**	
_Zoll Zeichnung Größe A	Scalarea 2:1	2024-10