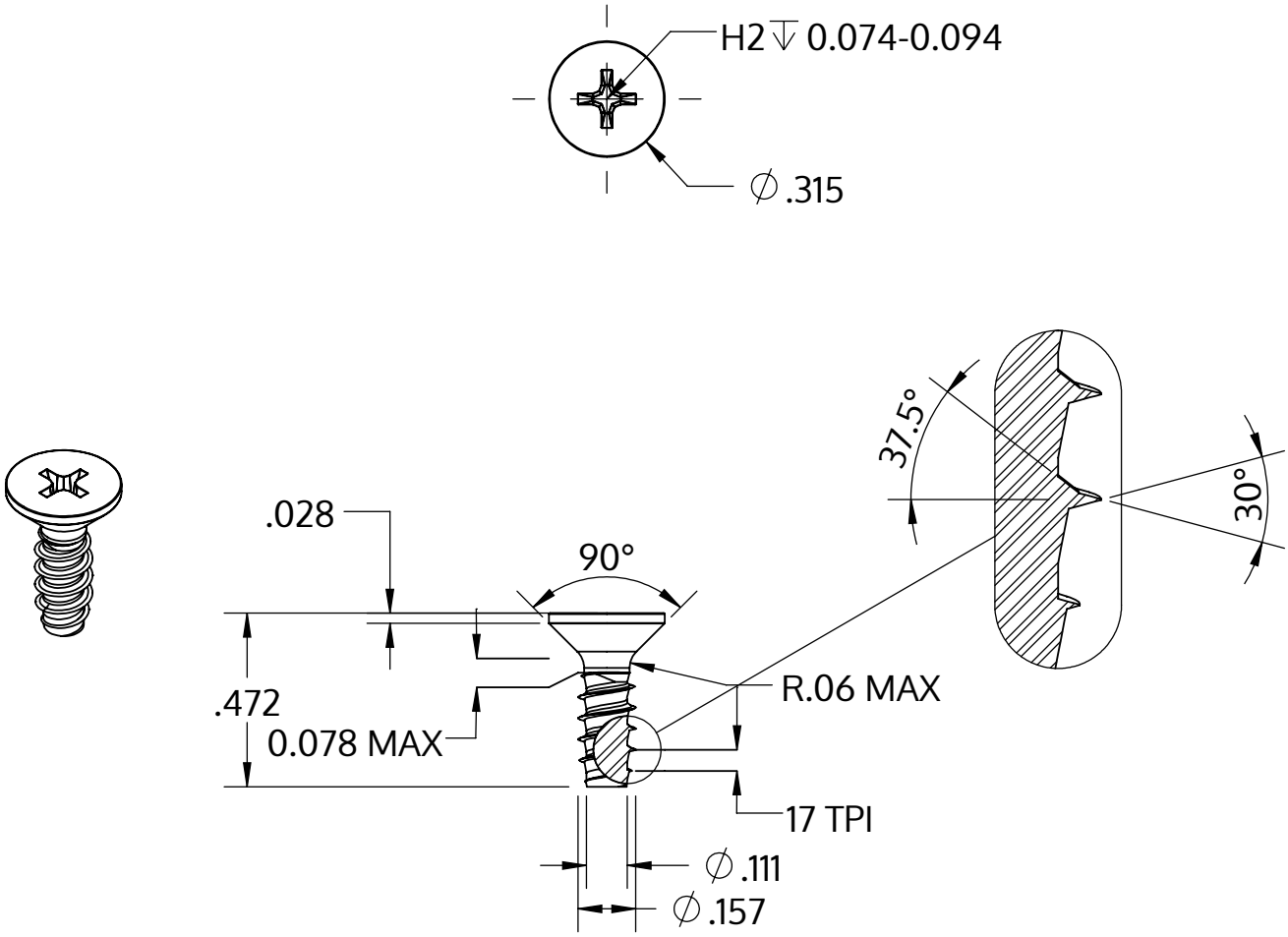

Metric size	M4 x 1.46 mm
US size (converted)	#8-17
	Tolerances [inch]
Length	+/- 0.021
Head diameter	+0 / -0.014
Head height	
Thread diameter	+0.003 / -0

Description	STP33 4.0x12.0 - H2
Matière	acier inoxydable A2
Surface	brillant décapé et passivé
Poids	1.097 kg / 1000 Unité

SCREWERK	**STP330400120E**	
_Zoll Zeichnung Größe A	Redimensionner None:1	2024-04