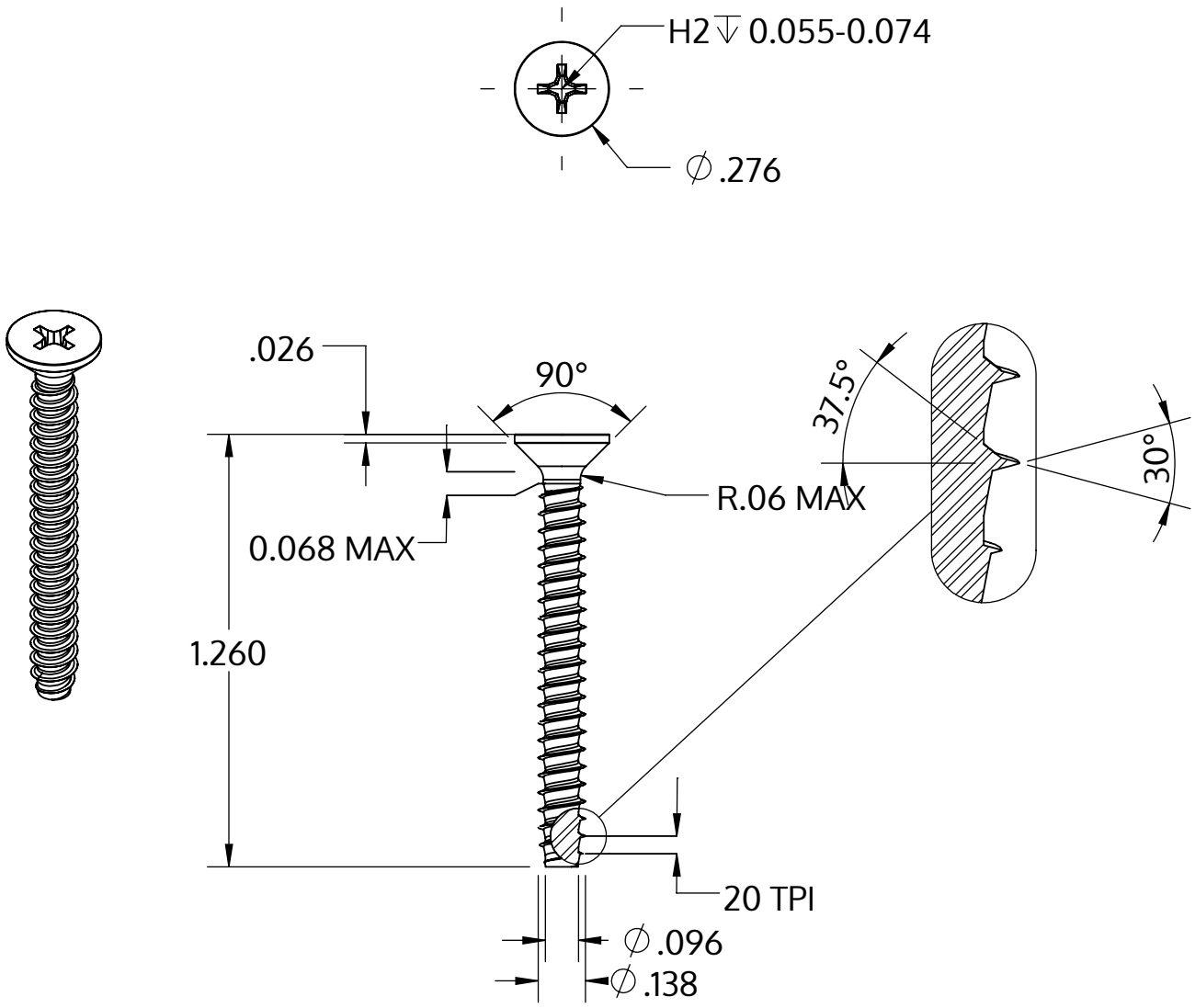

Metric size	M3.5 x 1.29 mm
US size (converted)	#6-20
	Tolerances [inch]
Length	+/- 0.031
Head diameter	+0 / -0.014
Head height	
Thread diameter	+0.003 / -0

Descriere	STP33 3.5x32.0 - H2
Material	oțel, călit
Exterior	zincat 5-7 µm, recopt, pasivat transparent/albastru
Greutate	1.767 kg / 1000 unități

SCREWERK	**STP330350320S**	
_Zoll Zeichnung Größe A	Scalarea 2:1	2024-10