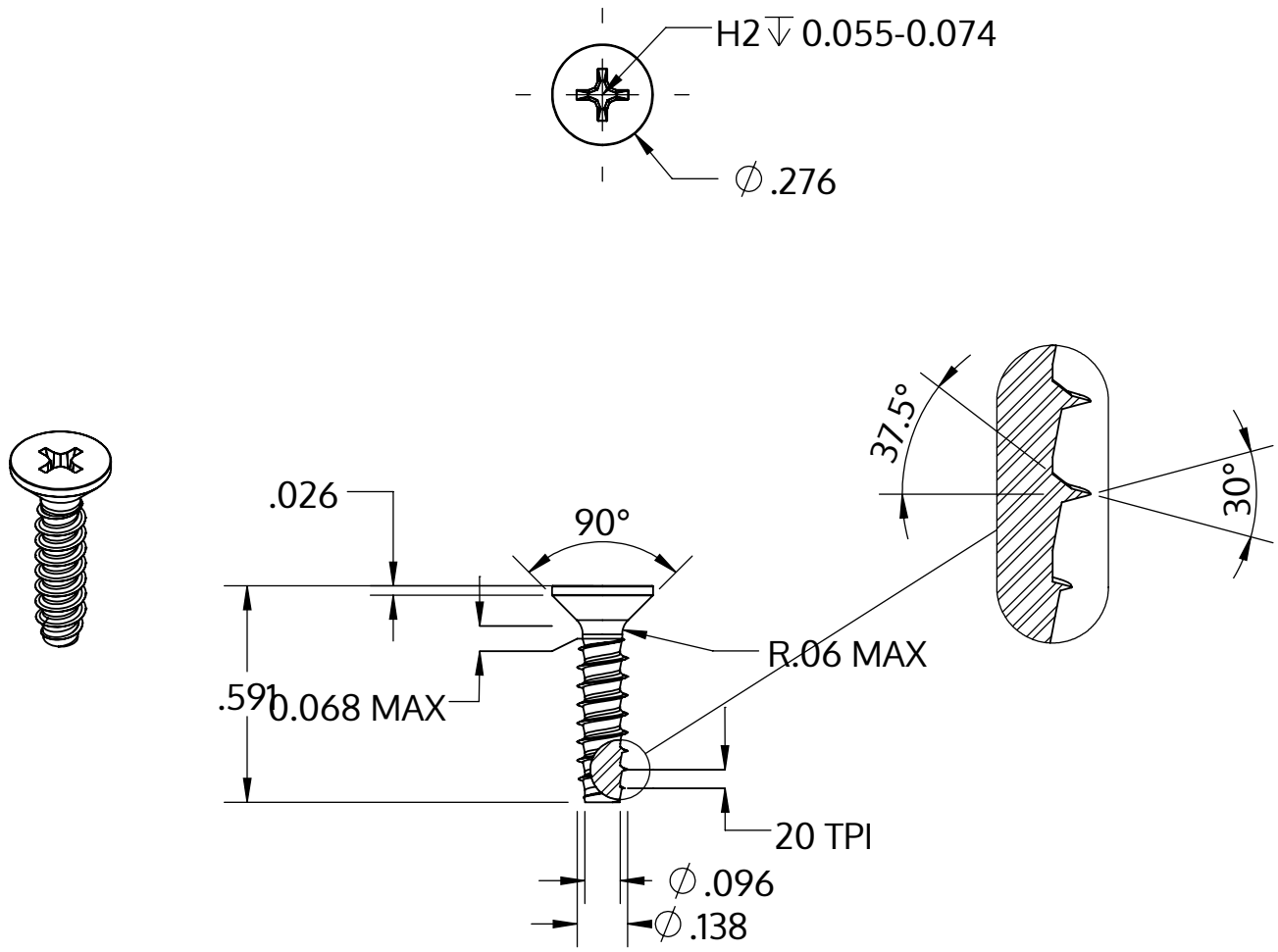


| | |
|---|---|
| Metric size | M3.5 x 1.29 mm |
| US size (converted) | #6-20 |
| | Tolerances [inch] |
| Length | +/- 0.021 |
| Head diameter | +0 / -0.014 |
| Head height | |
| Thread diameter | +0.003 / -0 |

| | |
|---|---|
| Description | STP33 3.5x15.0 - H2 |
| Material | stainless-steel A2 |
| Surface | bright, pickled and passivated |
| Weight | 0.964 kg / 1000 pieces |

| | | |
|---|---|---|
| SCREWERK | **STP330350150E** | |
| Inch Drawing Size A | Scale 2:1 | 2024-10 |