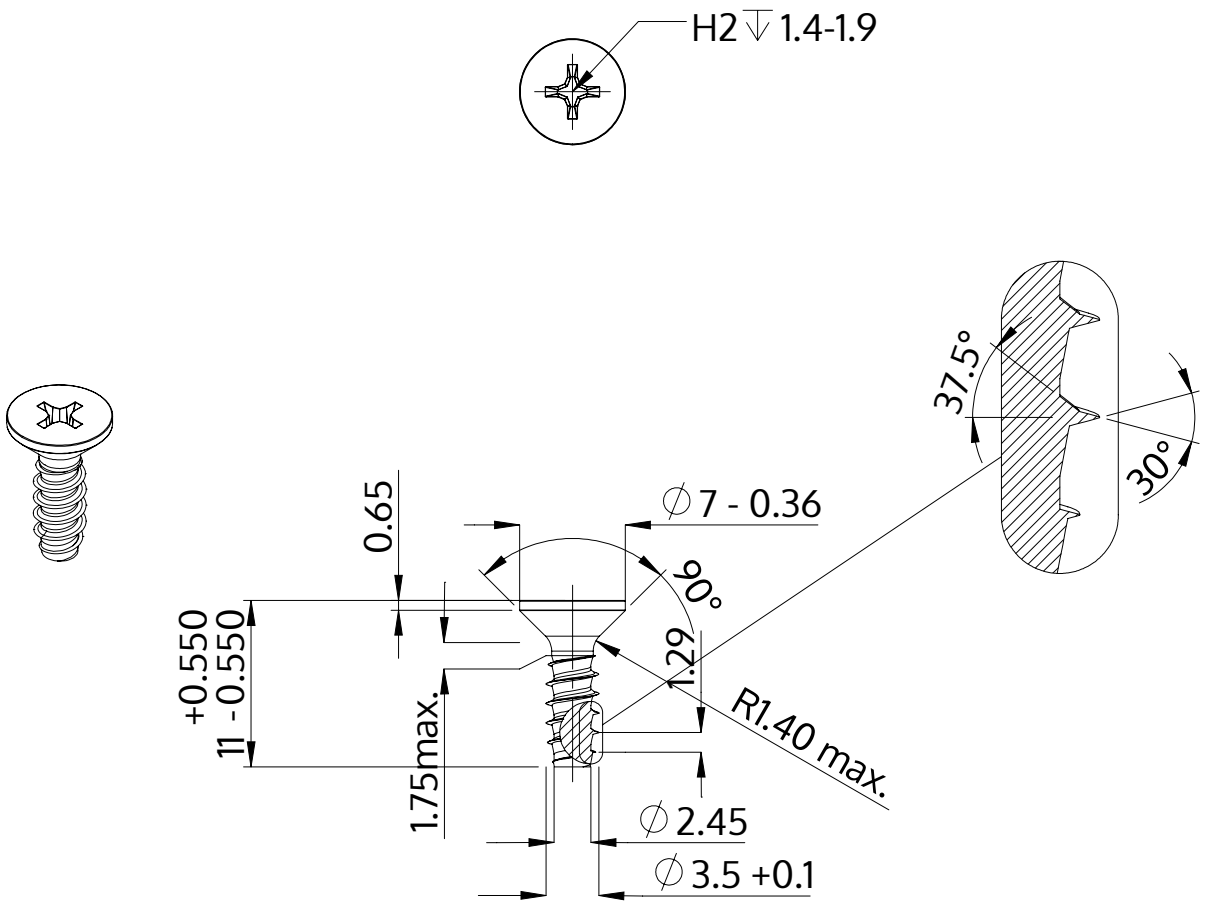

Description	STP33 3.5x11.0 - H2
Material	stainless steel A4
Surface	bright, pickled and passivated
Weight	0.775 kg / 1000 pieces

SCREWERK	**STP330350110C**	
Metric Drawing A4	Scale None:1	2024-04