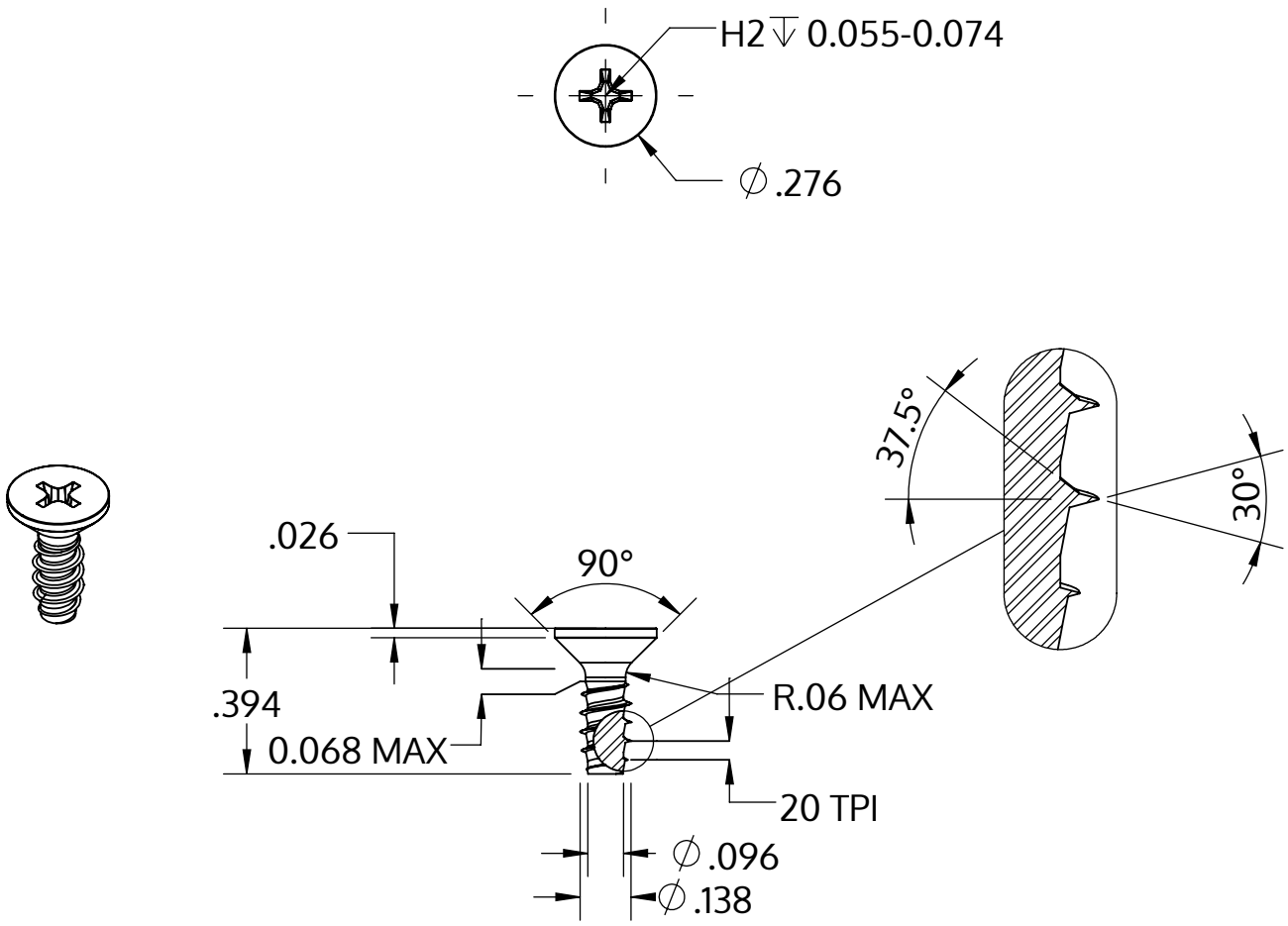


| | |
|---|---|
| Metric size | M3.5 x 1.29 mm |
| US size (converted) | #6-20 |
| | Tolerances [inch] |
| Length | +/- 0.017 |
| Head diameter | +0 / -0.014 |
| Head height | |
| Thread diameter | +0.003 / -0 |

| | |
|---|---|
| Opis | STP33 3.5x10.0 - H2 |
| Materiał | Stal szlachetna A4 |
| Powierzchnia | Prosta, bejcowana i pasywowana |
| Waga | 0.728 kg / 1000 sztuk |

| | | |
|---|---|---|
| SCREWERK | **STP330350100C** | |
| _Zoll Zeichnung Größe A | Skala 2:1 | 2024-10 |