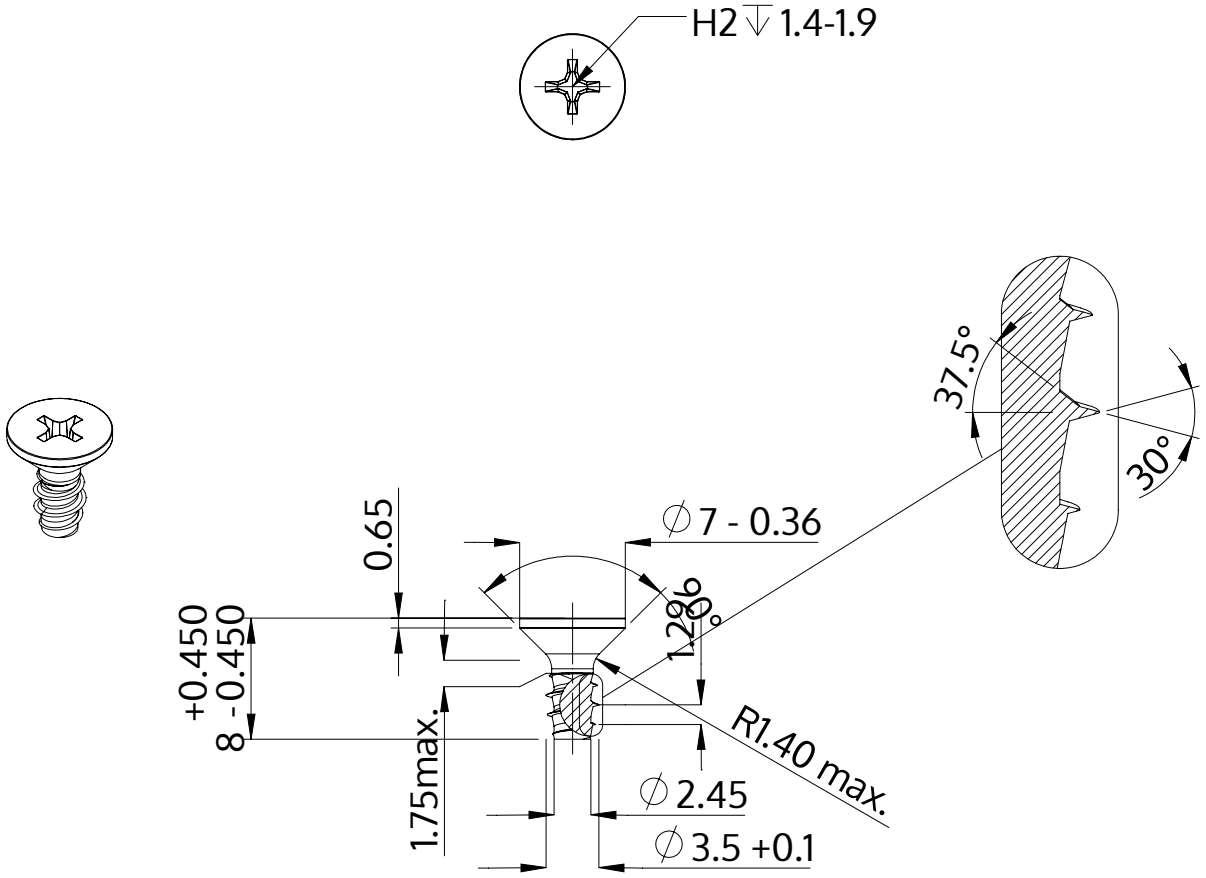

Description	STP33 3.5x8.0 - H2
Material	stainless steel A4
Surface	bright, pickled and passivated
Weight	0.633 kg / 1000 pieces

SCREWERK	**STP330350080C**	
Metric Drawing A4	Scale 2:1	2024-10