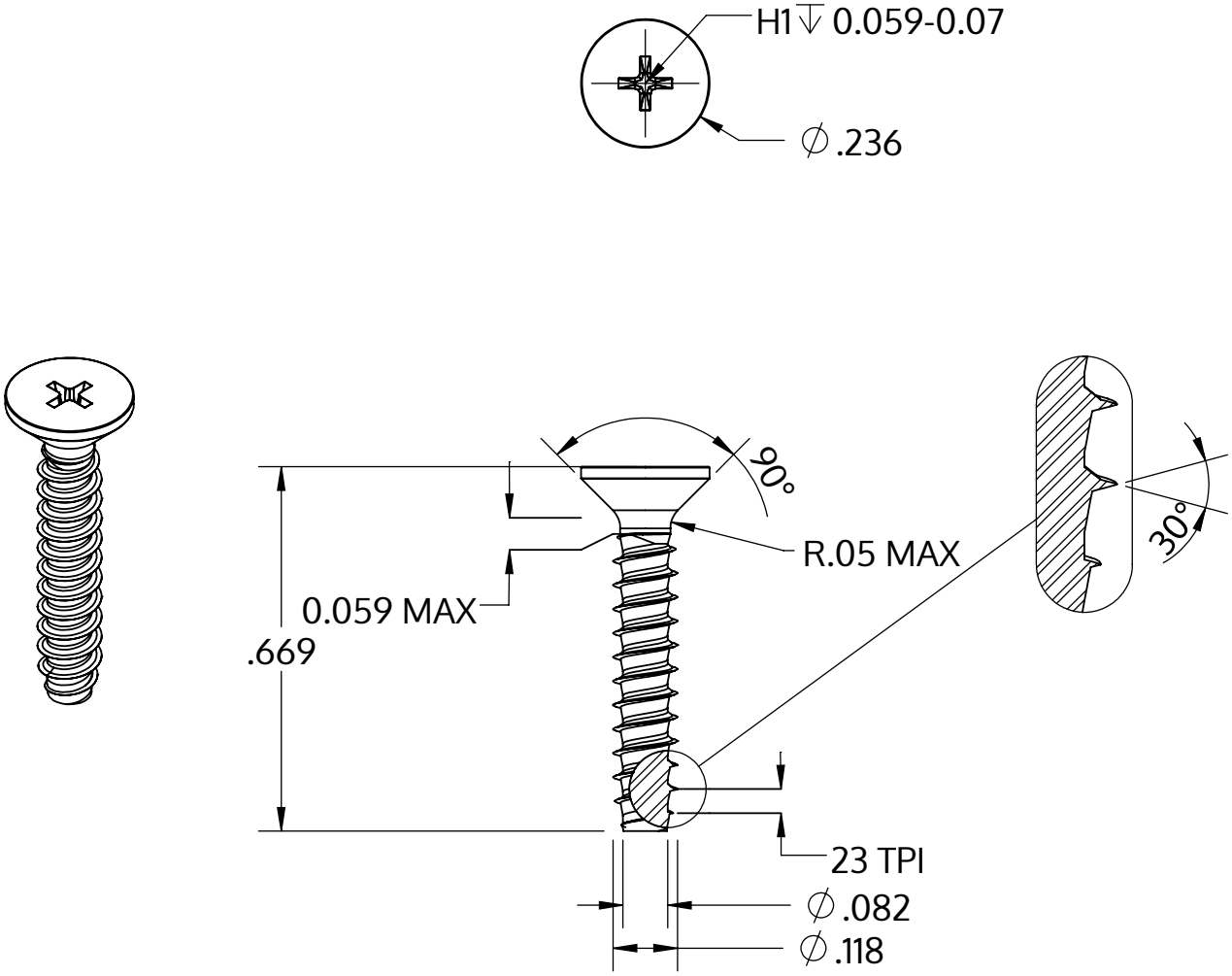

Metric size	M3 x 1.12 mm
US size (converted)	#4-23
	Tolerances [inch]
Length	+/- 0.021
Head diameter	+0 / -0.011
Head height	
Thread diameter	+0.003 / -0

Description	STP33 3.0x17.0 - H1
Matière	acier inoxydable A4
Surface	brillant décapé et passivé
Poids	0.737 kg / 1000 Unité

SCREWERK	**STP330300170C**	
_Zoll Zeichnung Größe A	Redimensionner 3:1	2024-10