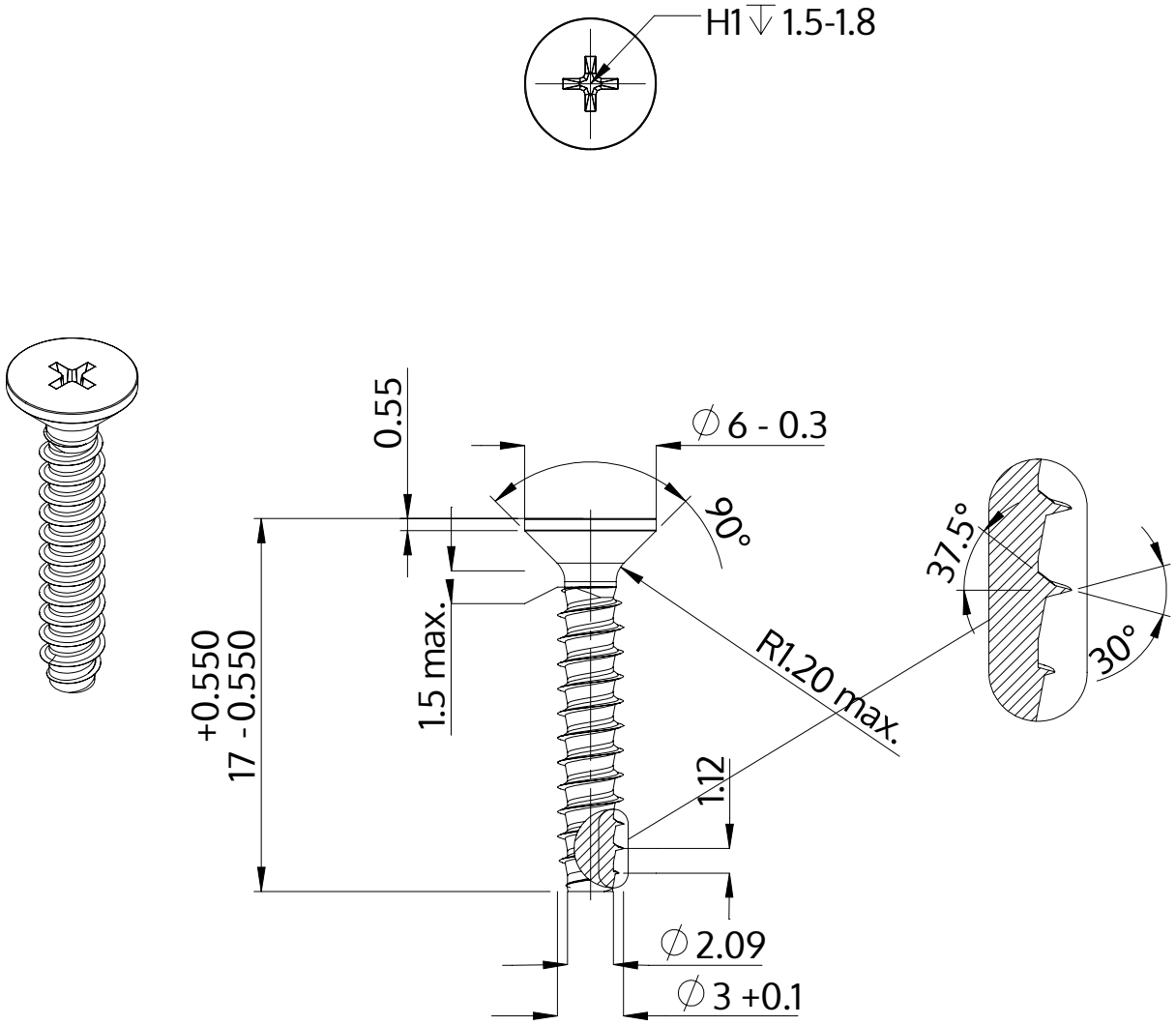

Description	STP33 3.0x17.0 - H1
Material	stainless steel A4
Surface	bright, pickled and passivated
Weight	0.744 kg / 1000 pieces

SCREWERK	**STP330300170C**	
Metric Drawing A4	Scale None:1	2024-04