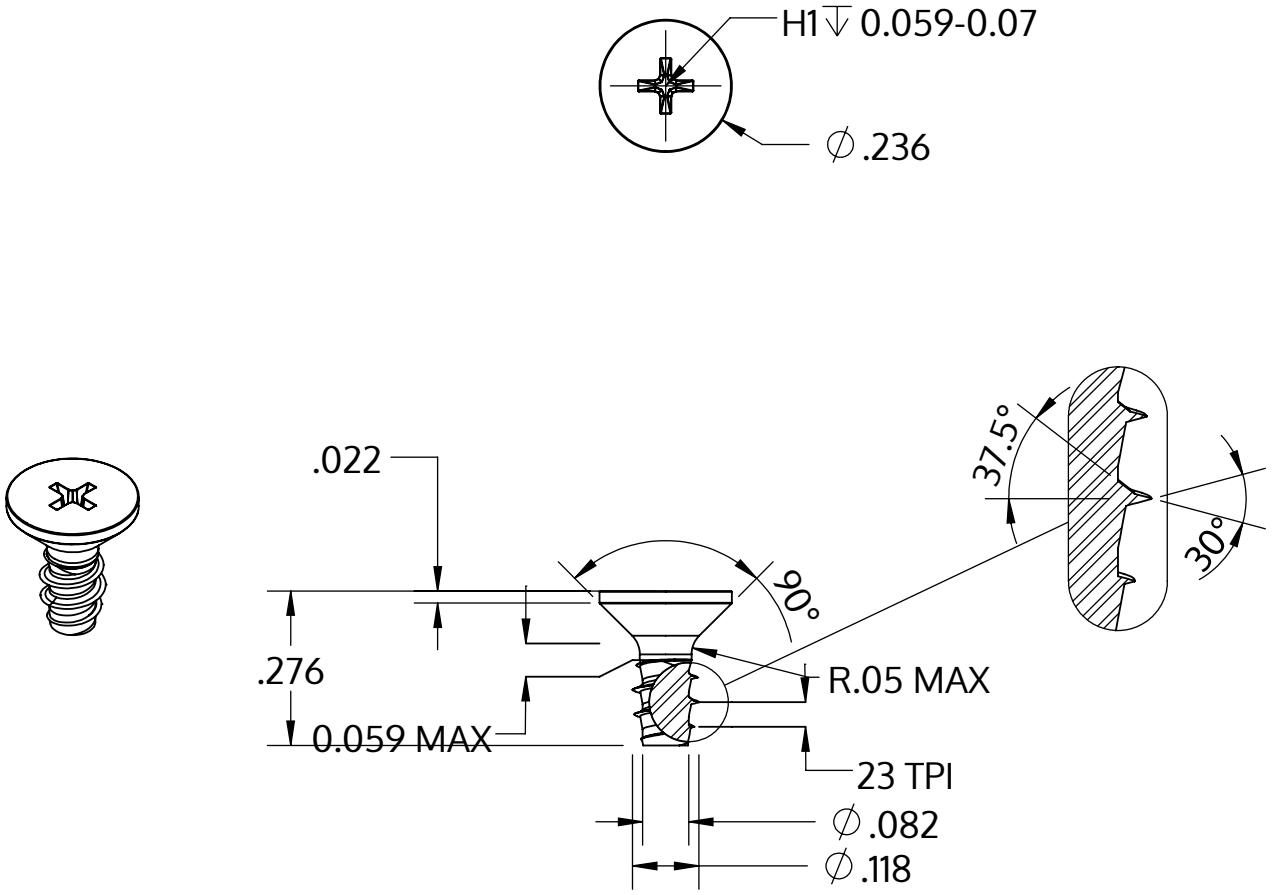


| | |
|---|---|
| Metric size | M3 x 1.12 mm |
| US size (converted) | #4-23 |
| | Tolerances [inch] |
| Length | +/- 0.017 |
| Head diameter | +0 / -0.011 |
| Head height | |
| Thread diameter | +0.003 / -0 |

| | |
|---|---|
| Popis | STP33 3.0x7.0 - H1 |
| Materiál | Nerezová ocel A4 |
| Povrch | holá, mořená a pásová ocel |
| Hmotnost | 0.402 kg / 1000 Kus |

| | | |
|---|---|---|
| SCREWERK | **STP330300070C** | |
| _Zoll Zeichnung Größe A | Měřítko 3:1 | 2024-10 |