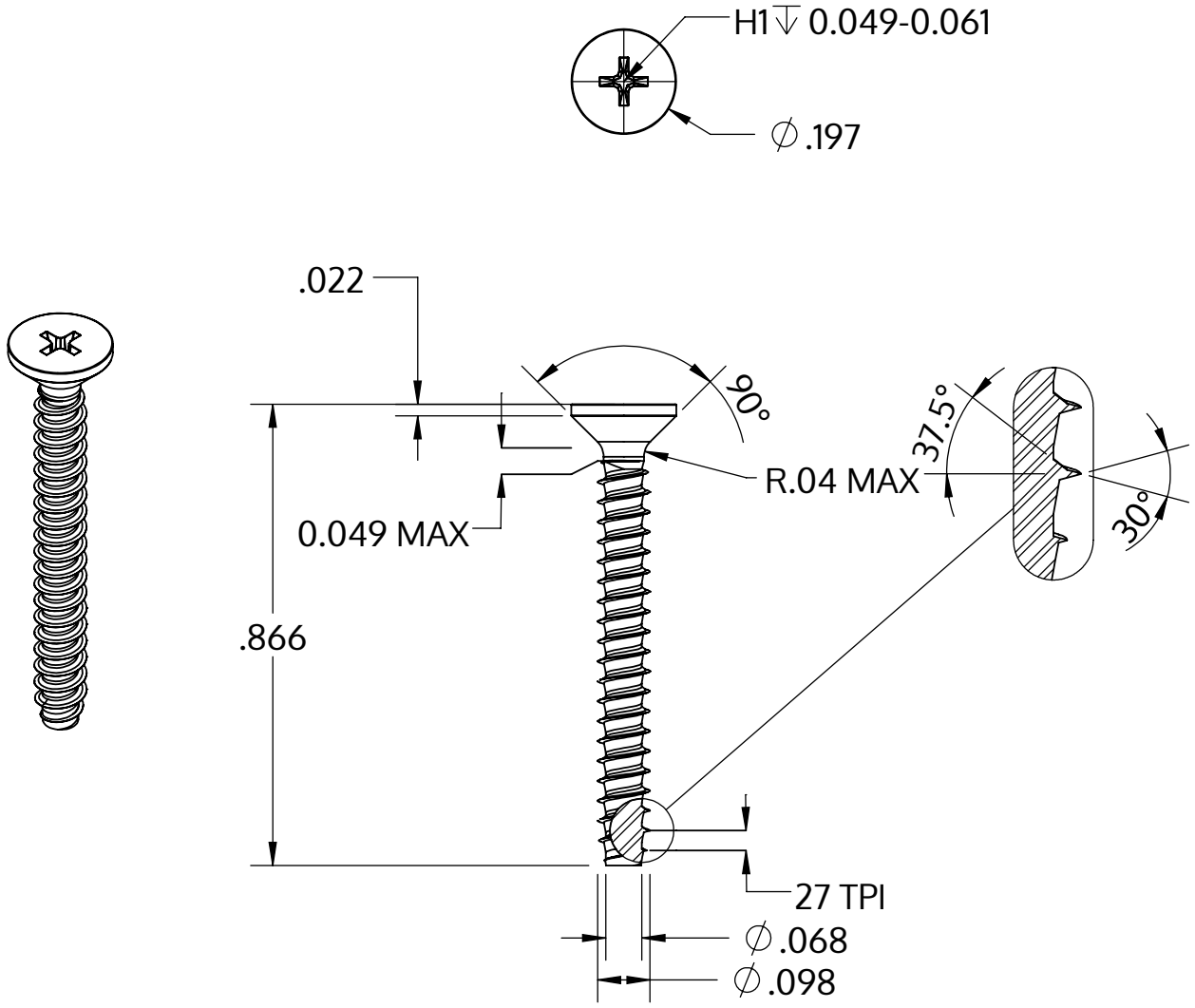


| | |
|---|---|
| Metric size | M2.5 x 0.95 mm |
| US size (converted) | #3-27 |
| | Tolerances [inch] |
| Length | +/- 0.025 |
| Head diameter | +0 / -0.011 |
| Head height | |
| Thread diameter | +0.003 / -0 |

| | |
|---|---|
| Beschrijving | STP33 2.5x22.0 - H1 |
| Materiaal | roestvrij staal A4 |
| Oppervlak | blank, geetst en gepassieveerd |
| Gewicht | 0.605 kg / 1000 stuk |

| | | |
|---|---|---|
| SCREWERK | **STP330250220C** | |
| _Zoll Zeichnung Größe A | Schaal 3:1 | 2024-10 |