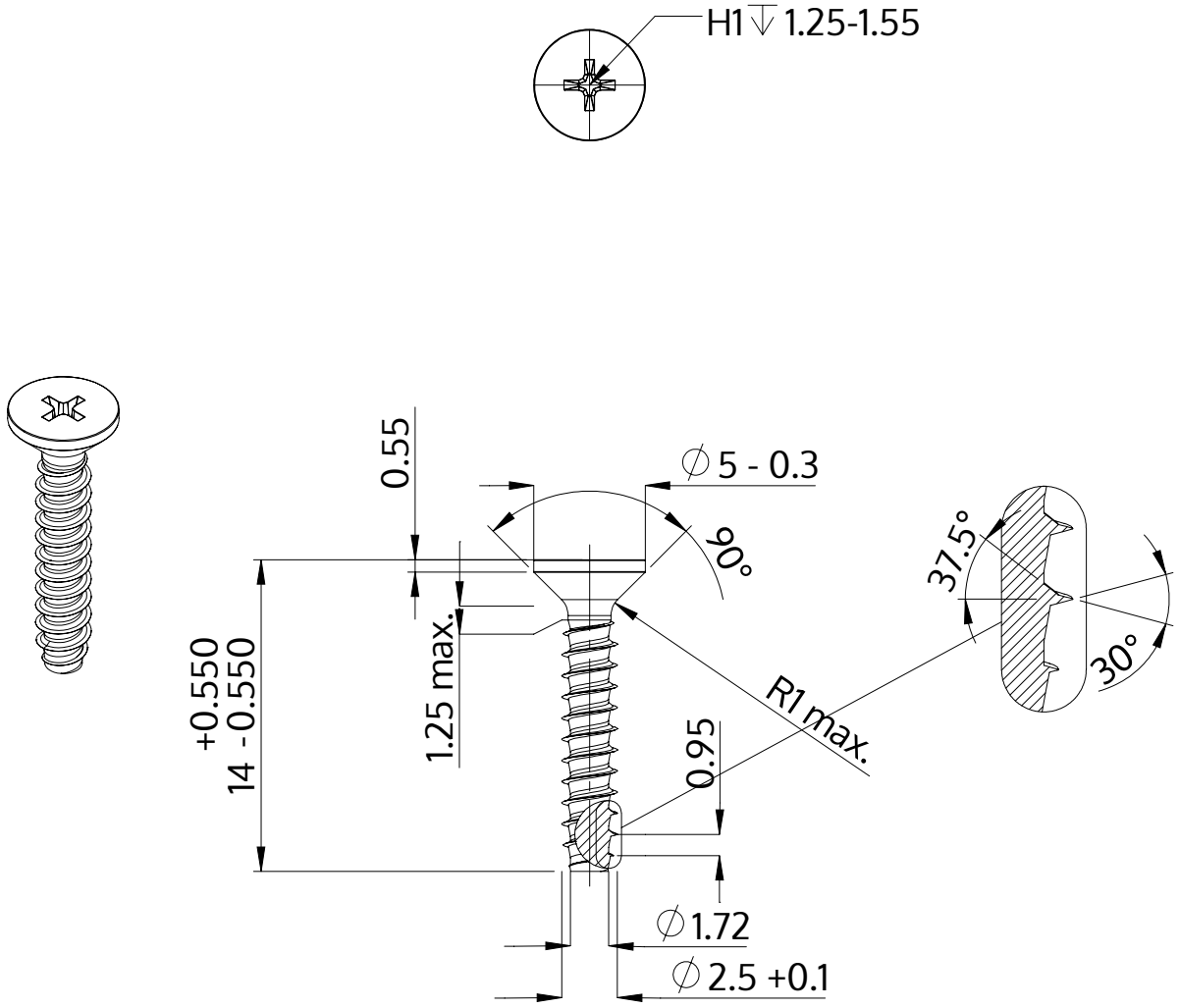

Description	STP33 2.5x14.0 - H1
Material	stainless steel A4
Surface	bright, pickled and passivated
Weight	0.412 kg / 1000 pieces

SCREWERK	**STP330250140C**	
Metric Drawing A4	Scale 3:1	2024-10