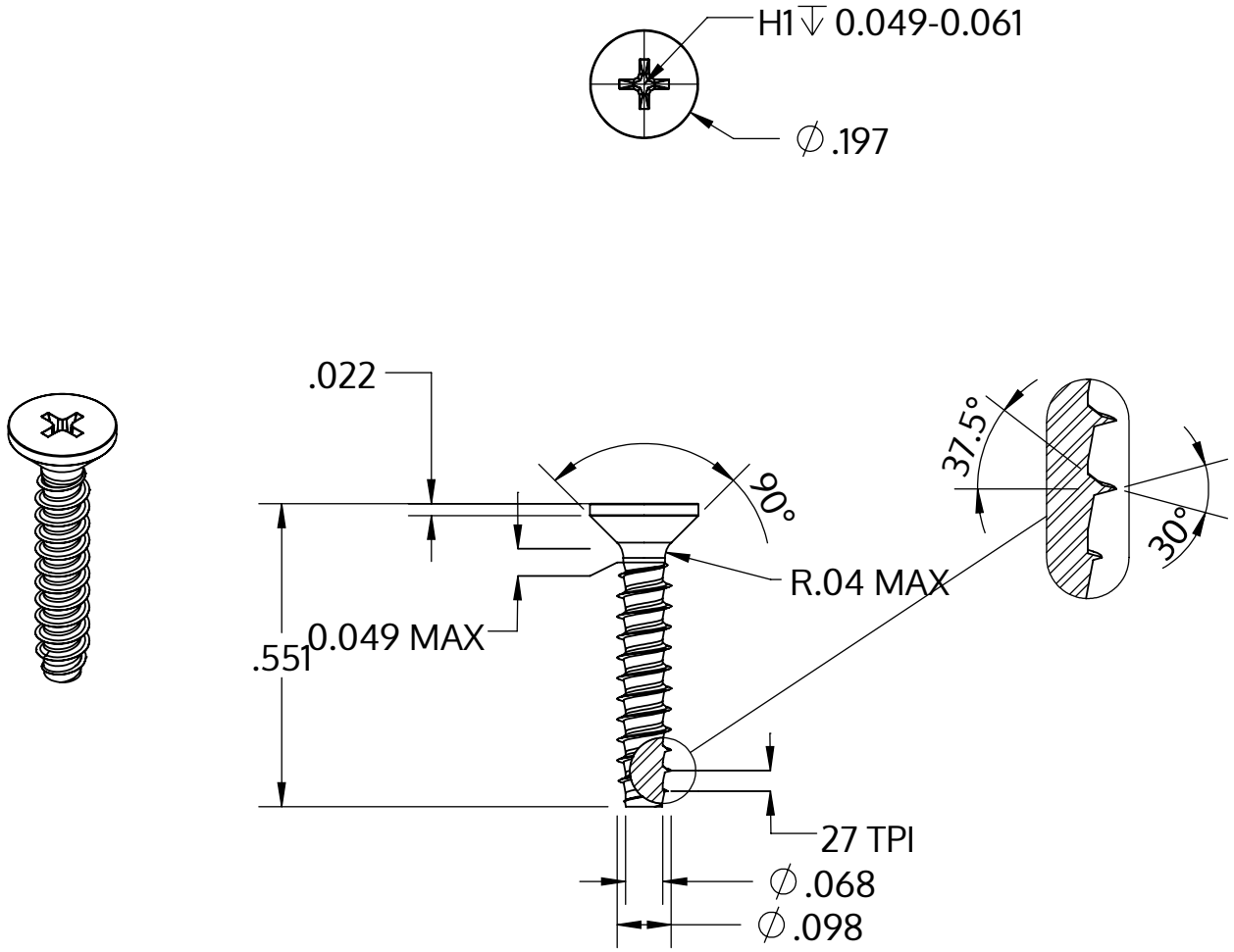

Metric size	M2.5 x 0.95 mm
US size (converted)	#3-27
	Tolerances [inch]
Length	+/- 0.021
Head diameter	+0 / -0.011
Head height	
Thread diameter	+0.003 / -0

Description	STP33 2.5x14.0 - H1
Material	steel, hardened
Surface	Zinc-Nickel-plated min. 5µm, passivated black/ Cr-VI-free, baked, sealed
Weight	0.412 kg / 1000 pieces

SCREWERK	**STP330250140B**	
Inch Drawing Size A	Scale 3:1	2024-10