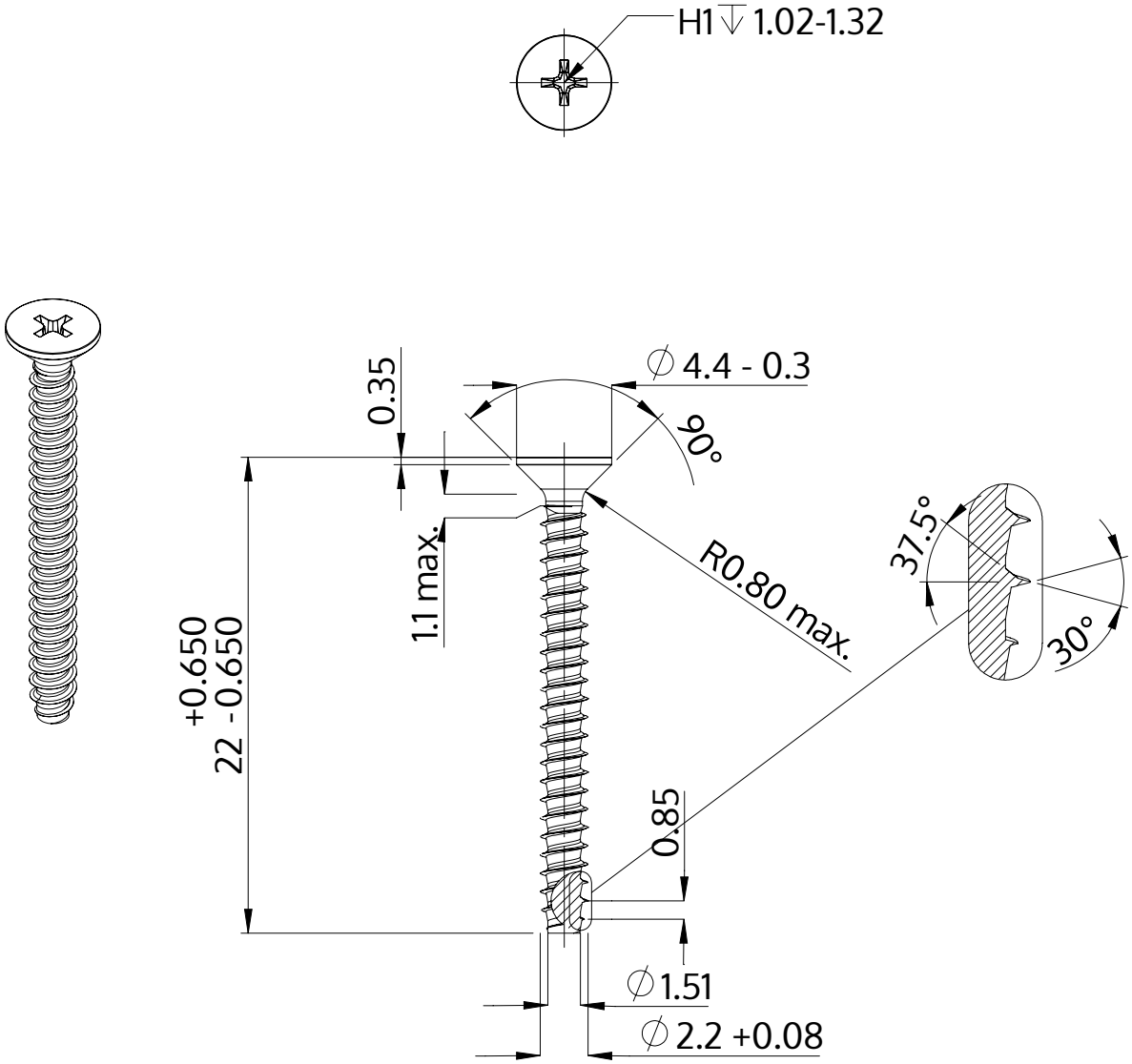

Description	STP33 2.2x22.0 - H1
Material	stainless-steel A2
Surface	bright, pickled and passivated
Weight	0.455 kg / 1000 pieces

SCREWERK	**STP330220220E**	
Metric Drawing A4	Scale None:1	2024-04