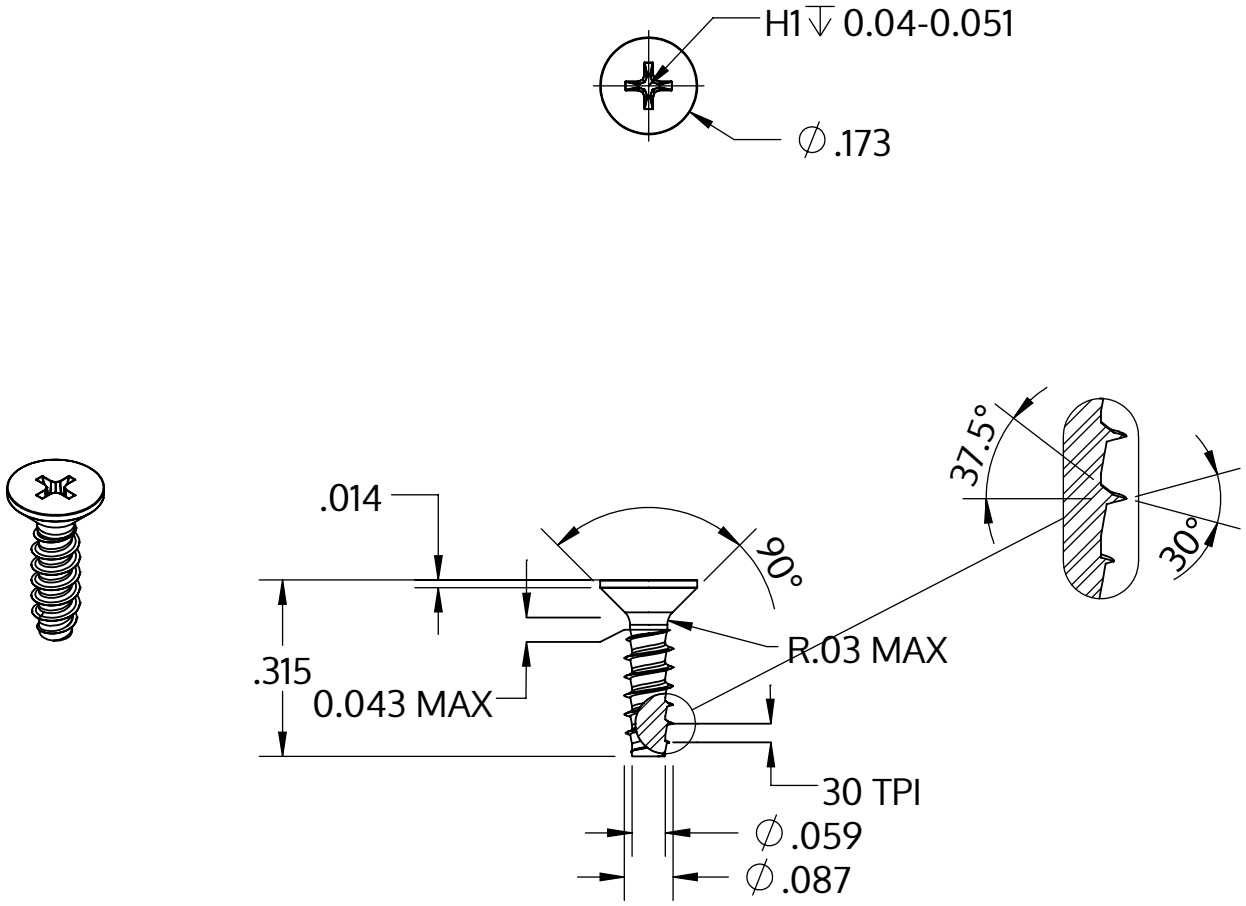

Metric size	M2.2 x 0.85 mm
US size (converted)	#2-30
	Tolerances [inch]
Length	+/- 0.017
Head diameter	+0 / -0.011
Head height	
Thread diameter	+0.003 / -0

Description	STP33 2.2x8.0 - H1
Material	stainless-steel A2
Surface	bright, pickled and passivated
Weight	0.195 kg / 1000 pieces

SCREWERK	**STP330220080E**	
Inch Drawing Size A	Scale 3:1	2024-10