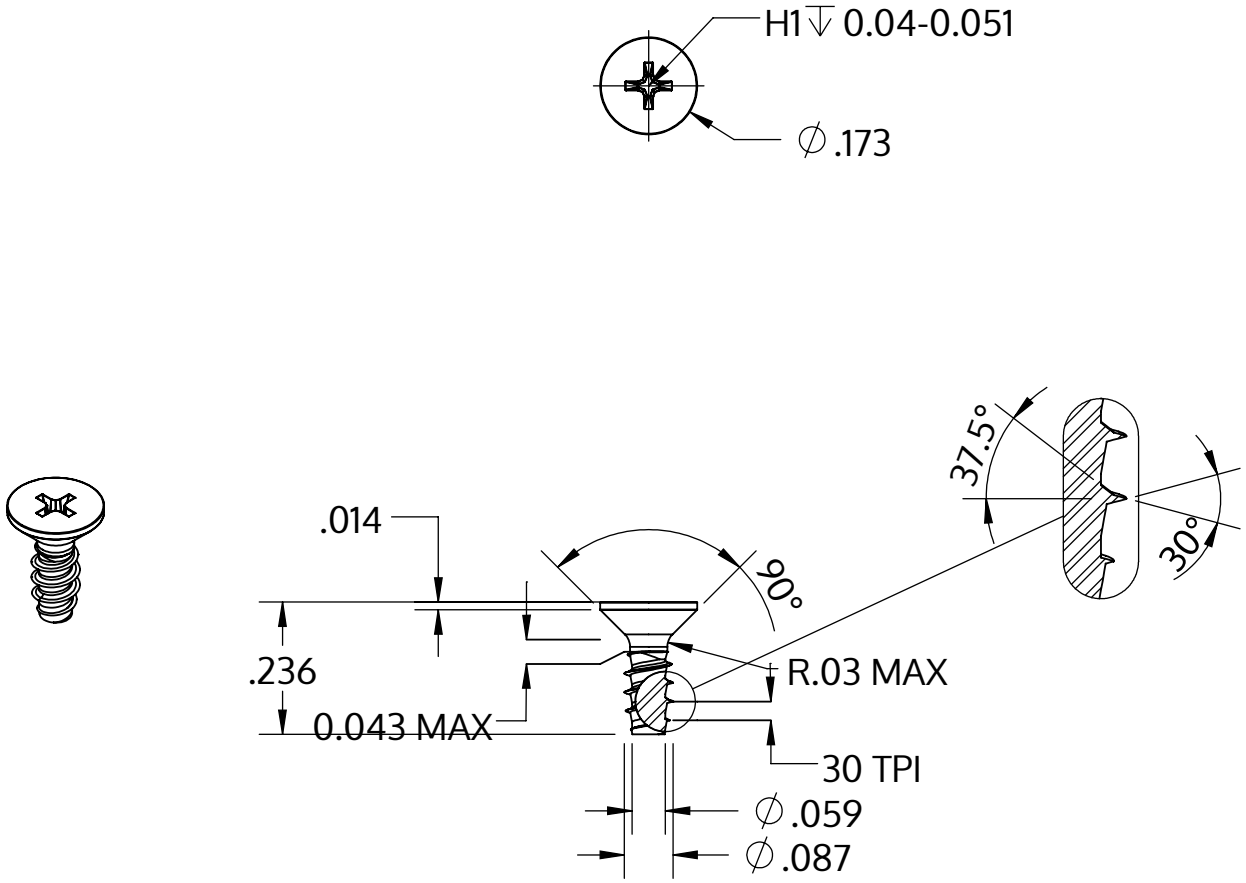


| | |
|---|---|
| Metric size | M2.2 x 0.85 mm |
| US size (converted) | #2-30 |
| | Tolerances [inch] |
| Length | +/- 0.014 |
| Head diameter | +0 / -0.011 |
| Head height | |
| Thread diameter | +0.003 / -0 |

| | |
|---|---|
| Description | STP33 2.2x6.0 - H1 |
| Material | steel, hardened |
| Surface | Zinc-Nickel-plated min. 5µm, passivated black/ Cr-VI-free, baked, sealed |
| Weight | 0.158 kg / 1000 pieces |

| | | |
|---|---|---|
| SCREWERK | **STP330220060B** | |
| Inch Drawing Size A | Scale 3:1 | 2024-05 |