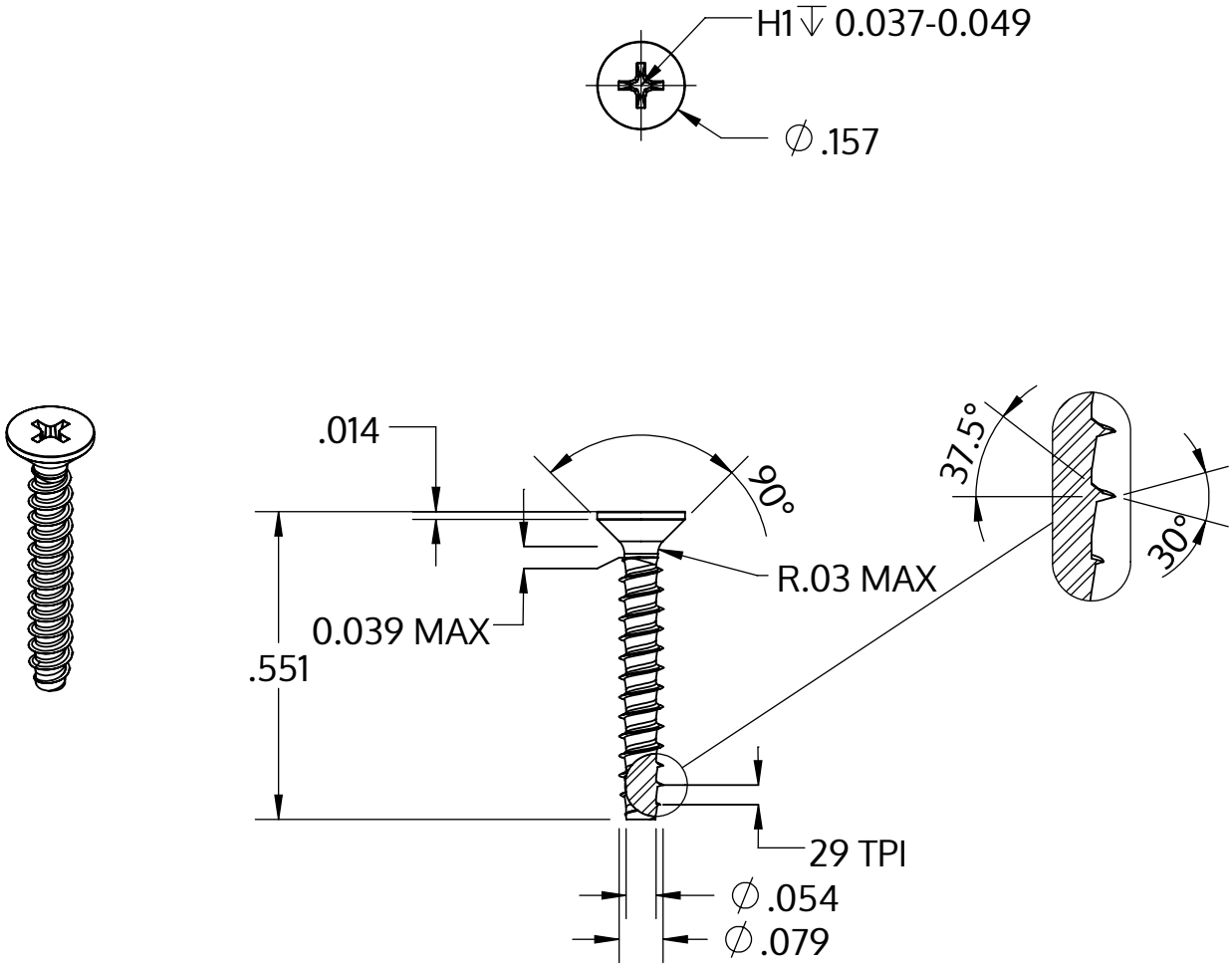


| | |
|---|---|
| Metric size | M2 x 0.89 mm |
| US size (converted) | #1.5-29 |
| | Tolerances [inch] |
| Length | +/- 0.021 |
| Head diameter | +0 / -0.011 |
| Head height | |
| Thread diameter | +0.003 / -0 |

| | |
|---|---|
| Descriere | STP33 2.0x14.0 - H1 |
| Material | oțel, călit |
| Exterior | zincat 5-7 µm, recopt, pasivat transparent/albastru |
| Greutate | 0.255 kg / 1000 unități |

| | | |
|---|---|---|
| SCREWERK | **STP330200140S** | |
| _Zoll Zeichnung Größe A | Scalarea 3:1 | 2024-05 |