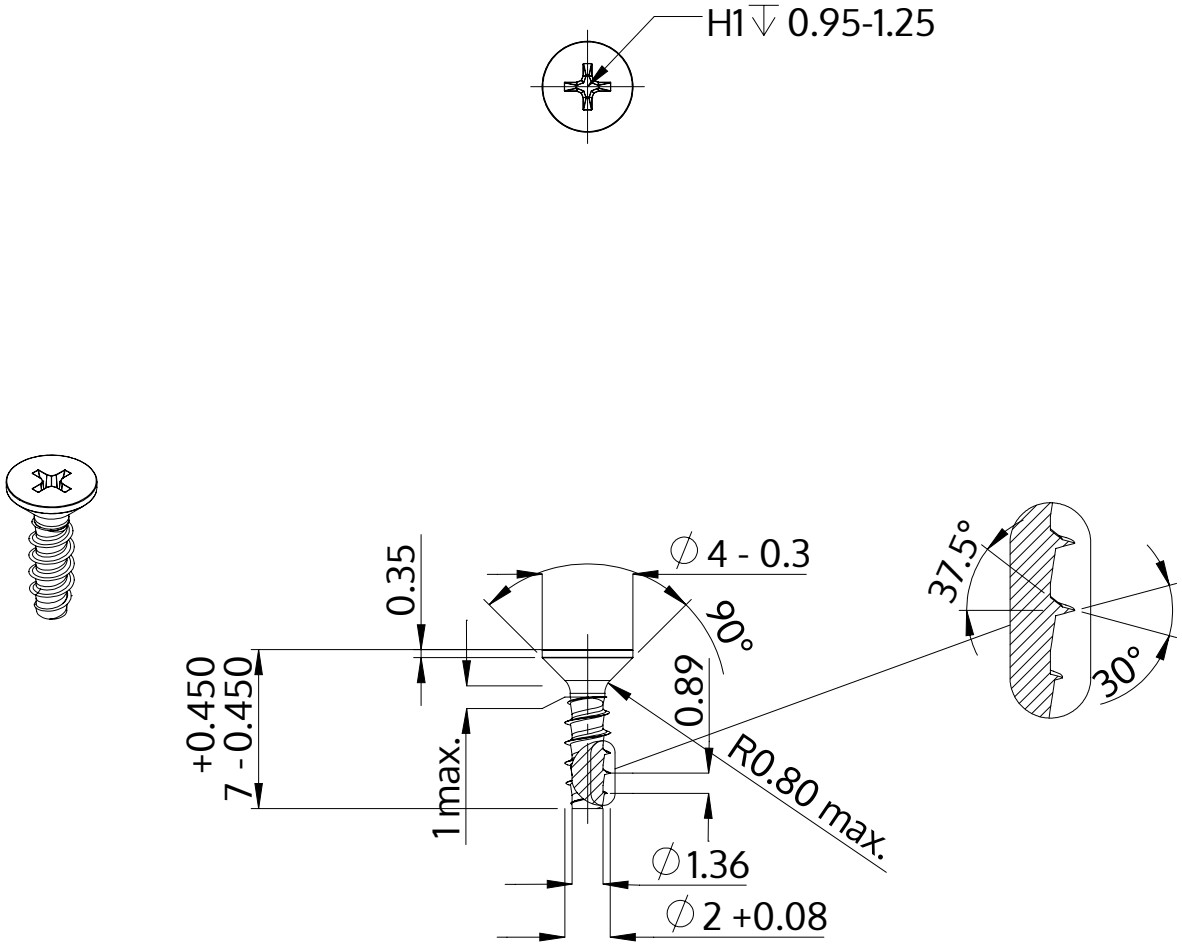

Description	STP33 2.0x7.0 - H1
Material	stainless-steel A2
Surface	bright, pickled and passivated
Weight	0.146 kg / 1000 pieces

SCREWERK	**STP330200070E**	
Metric Drawing A4	Scale 3:1	2024-10