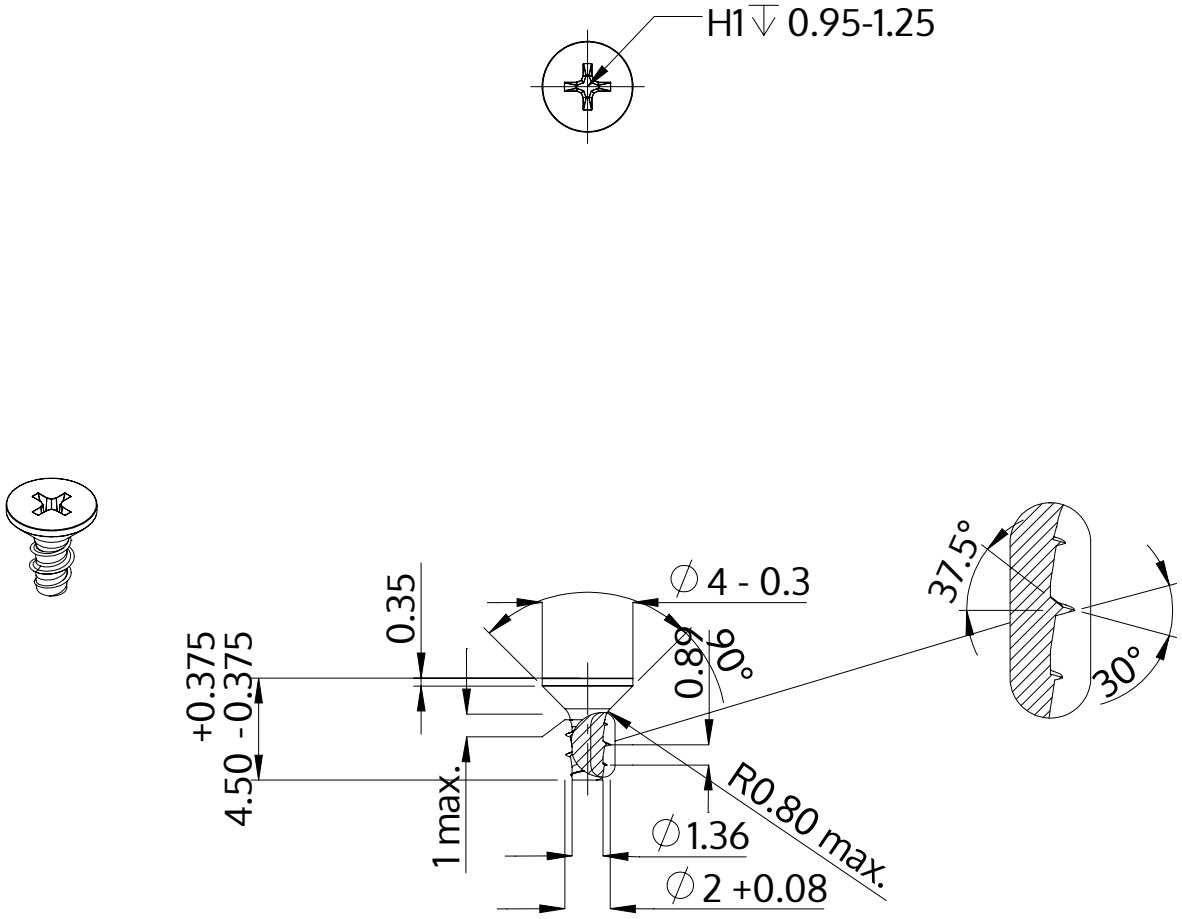

Description	STP33 2.0x4.5 - H1
Material	steel, hardened
Surface	zinc-plated 5-7 µm, baked, blue / transparent passivated
Weight	0.107 kg / 1000 pieces

SCREWERK	**STP330200045S**	
Metric Drawing A4	Scale None:1	2024-04