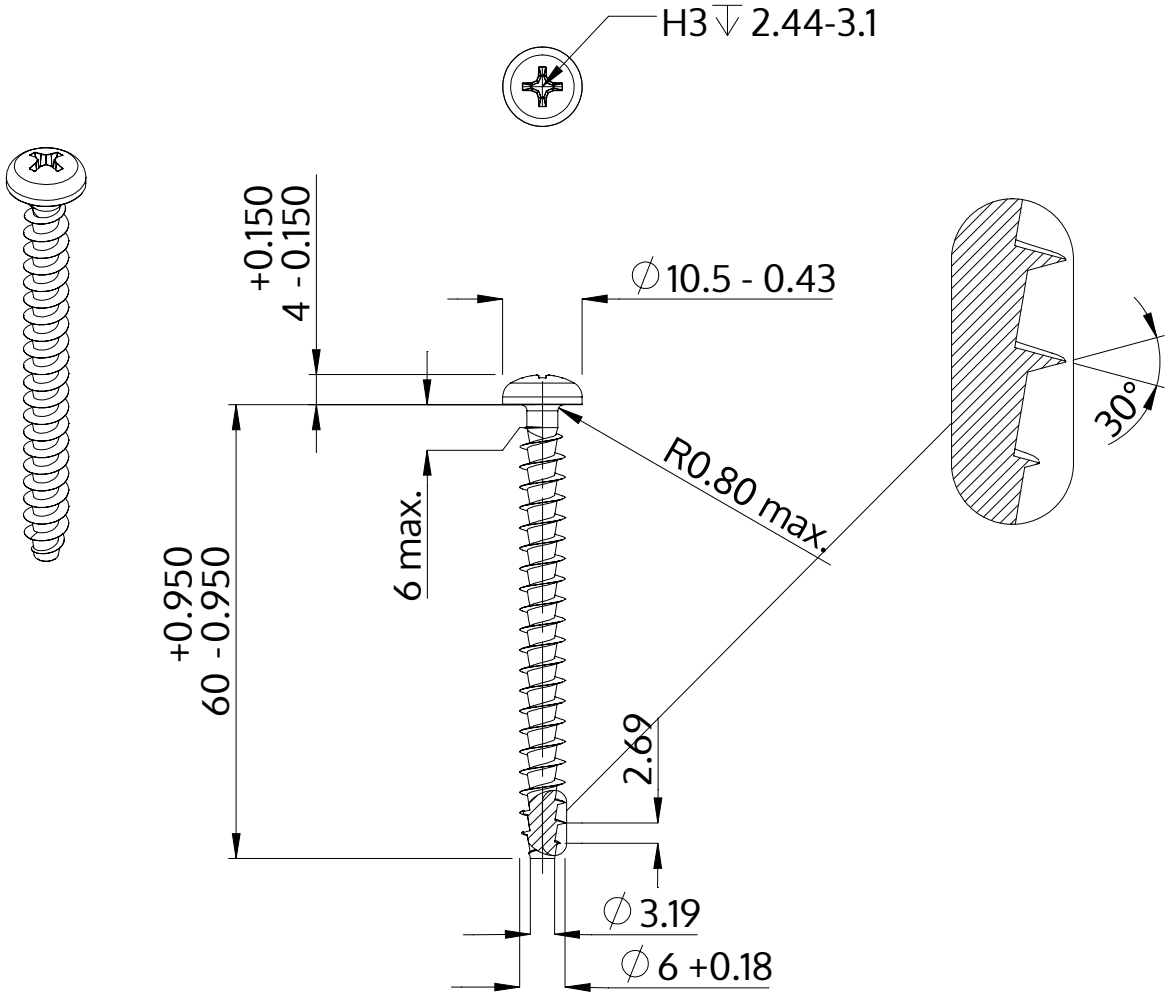

Description	STP32A 6.0x60.0 - H3
Material	stainless-steel A2
Surface	bright, pickled and passivated
Weight	7.964 kg / 1000 pieces

SCREWERK	**STP32A0600600E**	
Metric Drawing A4	Scale 1:1	2024-10