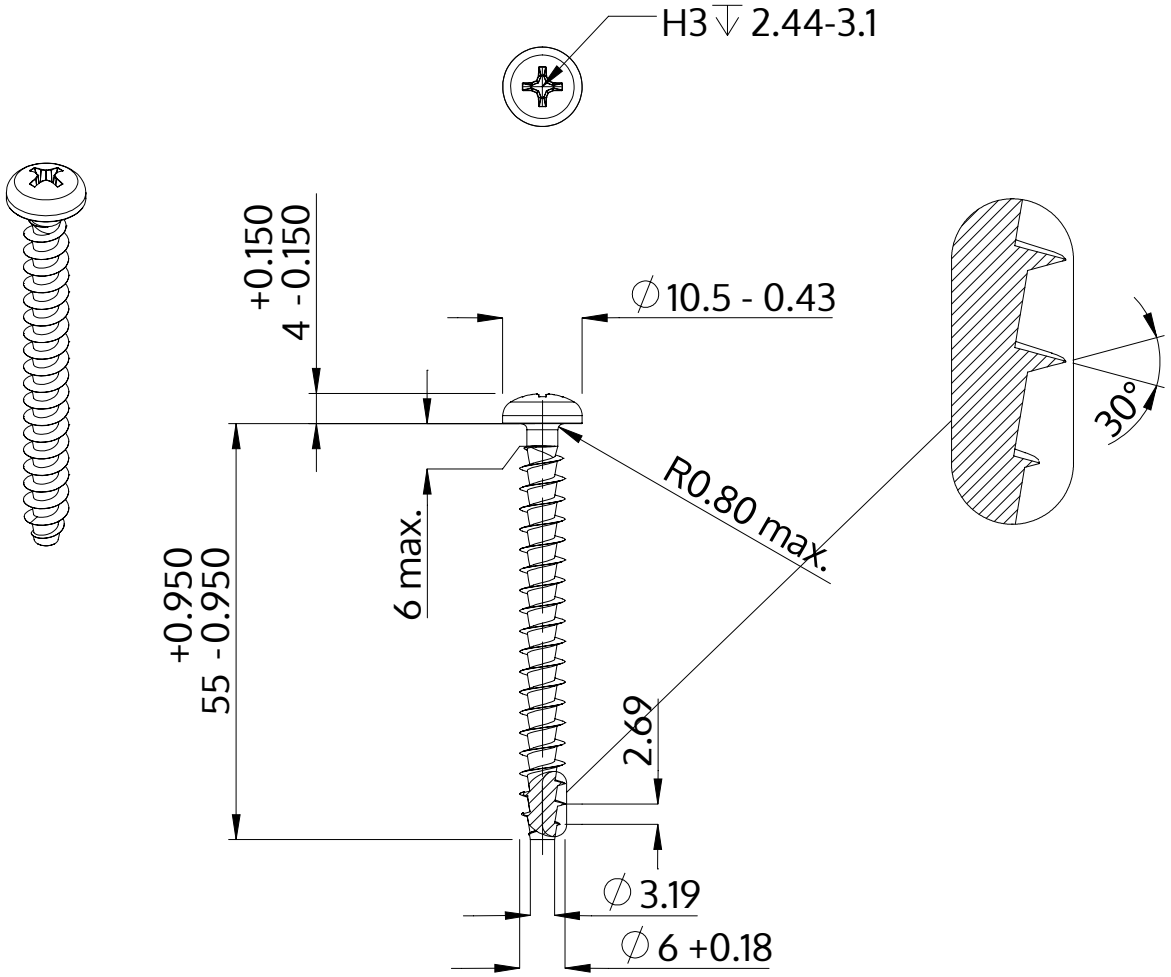

Description	STP32A 6.0x55.0 - H3
Material	stainless-steel A2
Surface	bright, pickled and passivated
Weight	7.453 kg / 1000 pieces

SCREWERK	**STP32A0600550E**	
Metric Drawing A4	Scale None:1	2024-04