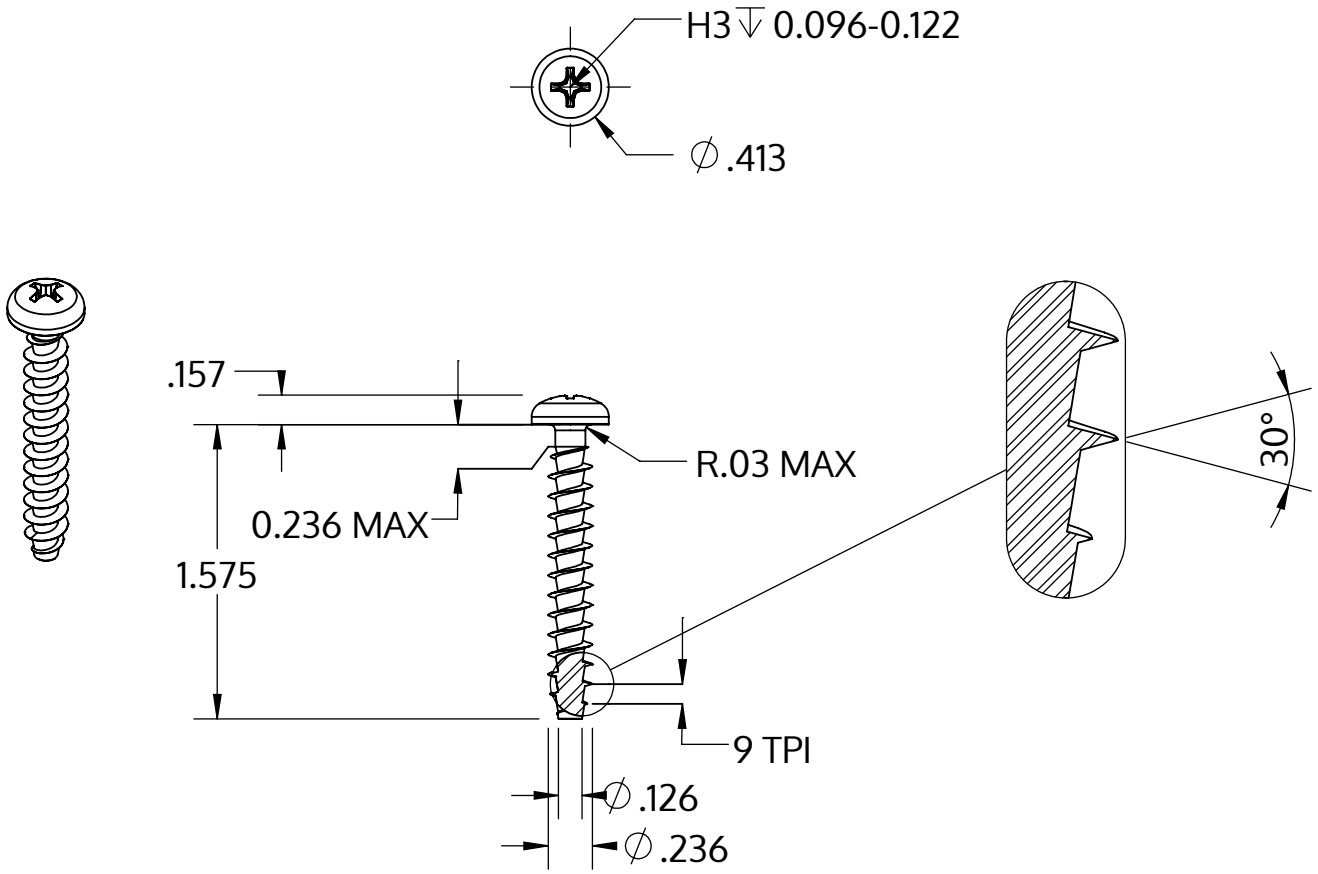


| | |
|---|---|
| Metric size | M6 x 2.69 mm |
| US size (converted) | #0.236-9 |
| | Tolerances [inch] |
| Length | +/- 0.031 |
| Head diameter | +0 / -0.016 |
| Head height | +/- 0.005 |
| Thread diameter | +0.007 / -0 |

| | |
|---|---|
| Description | STP32A 6.0x40.0 - H3 |
| Matière | acier inoxydable A2 |
| Surface | brillant décapé et passivé |
| Poids | 5.922 kg / 1000 Unité |

| | | |
|---|---|---|
| SCREWERK | **STP32A0600400E** | |
| _Zoll Zeichnung Größe A | Redimensionner 1:1 | 2024-10 |