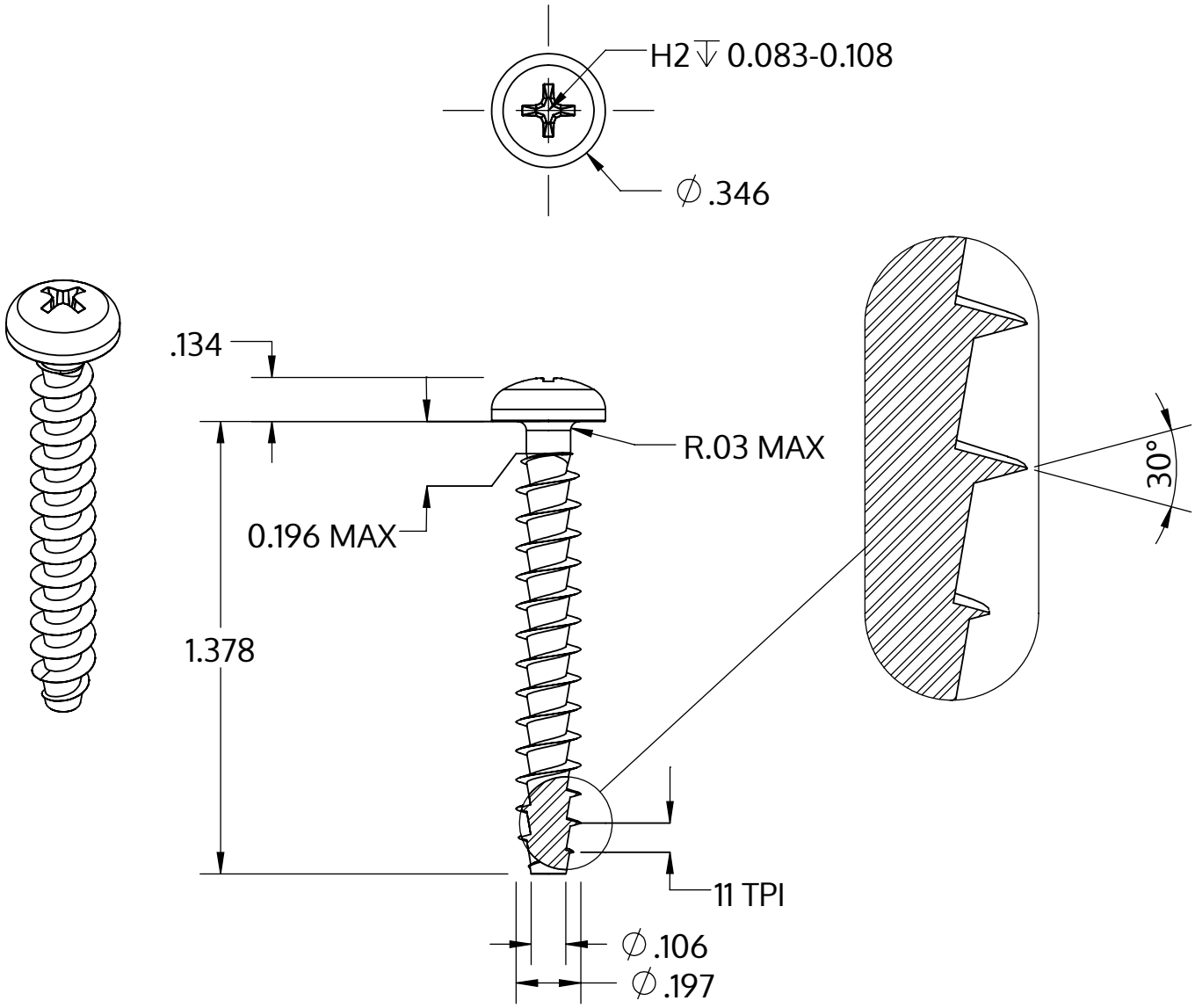


| | |
|---|---|
| Metric size | M5 x 2.24 mm |
| US size (converted) | #11-11 |
| | Tolerances [inch] |
| Length | +/- 0.031 |
| Head diameter | +0 / -0.014 |
| Head height | +/- 0.005 |
| Thread diameter | +0.007 / -0 |

| | |
|---|---|
| Opis | STP32A 5.0x35.0 - H2 |
| Materiał | Stal szlachetna A2 |
| Powierzchnia | Prosta, bejcowana i pasywowana |
| Waga | 3.636 kg / 1000 sztuk |

| | | |
|---|---|---|
| SCREWERK | **STP32A0500350E** | |
| _Zoll Zeichnung Größe A | Skala 2:1 | 2024-10 |