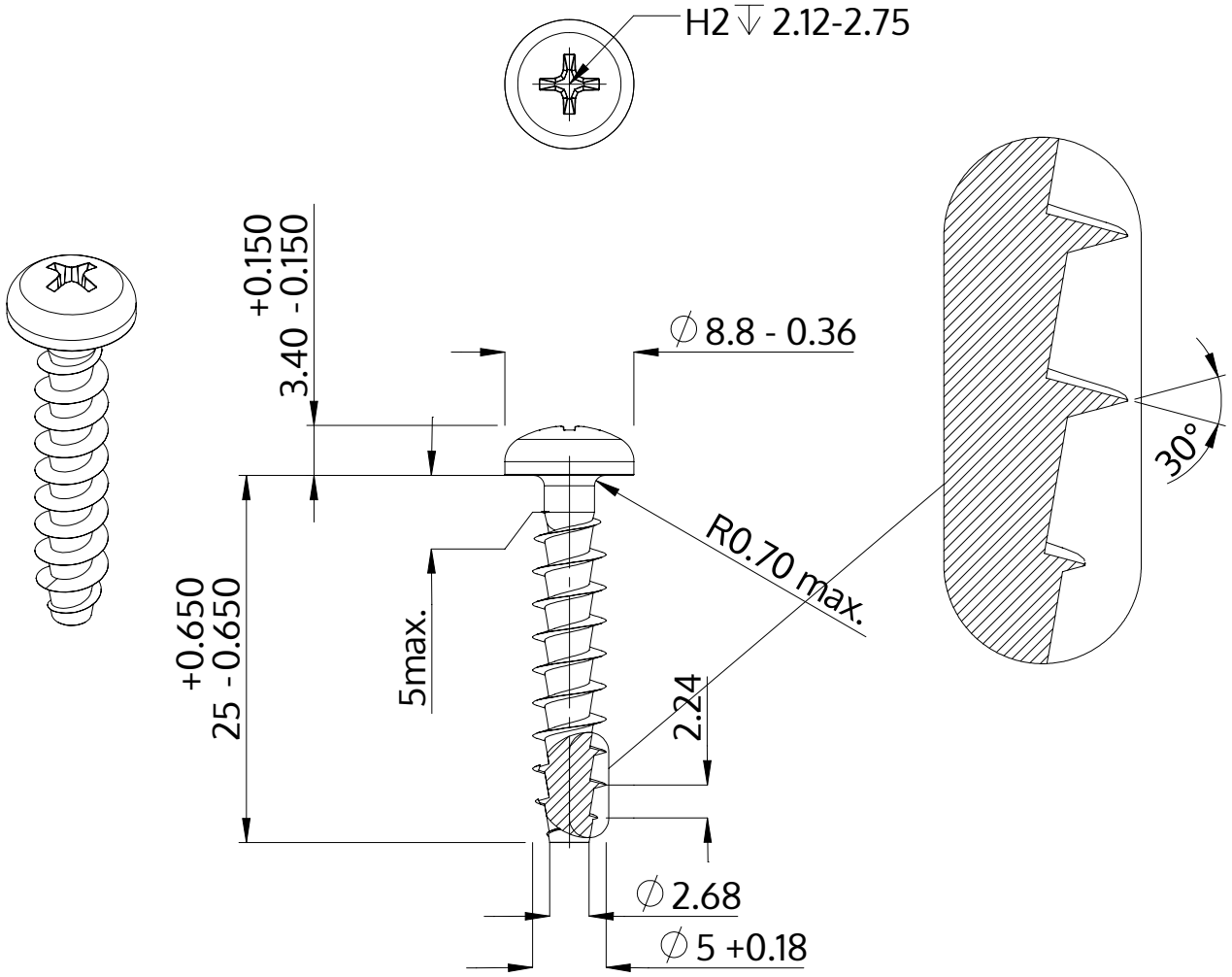

Description	STP32A 5.0x25.0 - H2
Material	steel, hardened
Surface	zinc-plated 5-7 µm, baked, blue / transparent passivated
Weight	2.895 kg / 1000 pieces

SCREWERK	**STP32A0500250S**	
Metric Drawing A4	Scale None:1	2024-04