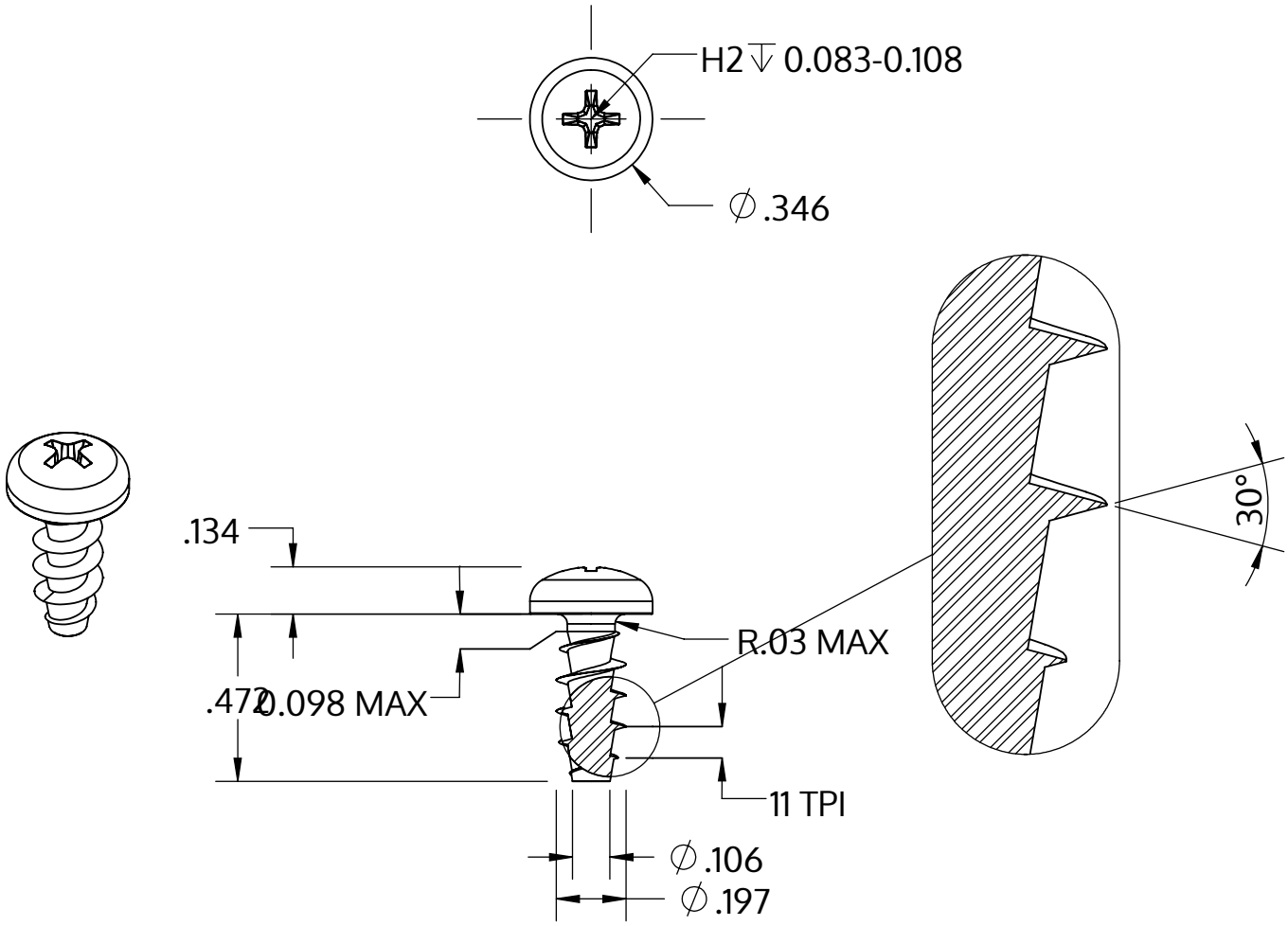

Metric size	M5 x 2.24 mm
US size (converted)	#11-11
	Tolerances [inch]
Length	+/- 0.021
Head diameter	+0 / -0.014
Head height	+/- 0.005
Thread diameter	+0.007 / -0

Descriere	STP32A 5.0x12.0 - H2
Material	oțel, călit
Exterior	zincat 5-7 µm, recopt, pasivat transparent/albastru
Greutate	1.932 kg / 1000 unități

SCREWERK	**STP32A0500120S**	
_Zoll Zeichnung Größe A	Scalarea 2:1	2024-10