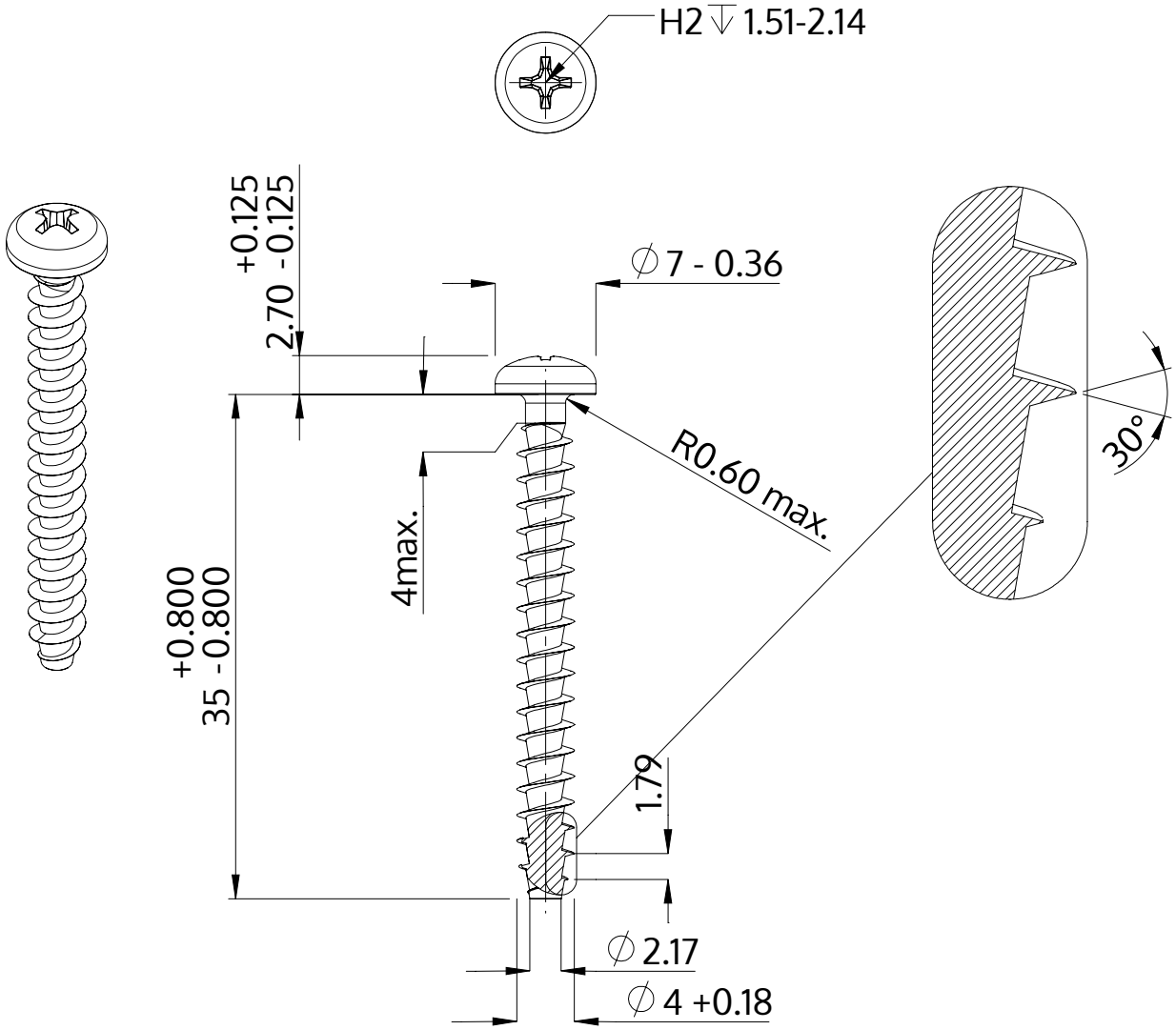

Description	STP32A 4.0x35.0 - H2
Material	steel, hardened
Surface	zinc-plated 5-7 µm, baked, blue / transparent passivated
Weight	2.206 kg / 1000 pieces

SCREWERK	**STP32A0400350S**	
Metric Drawing A4	Scale 2:1	2024-05