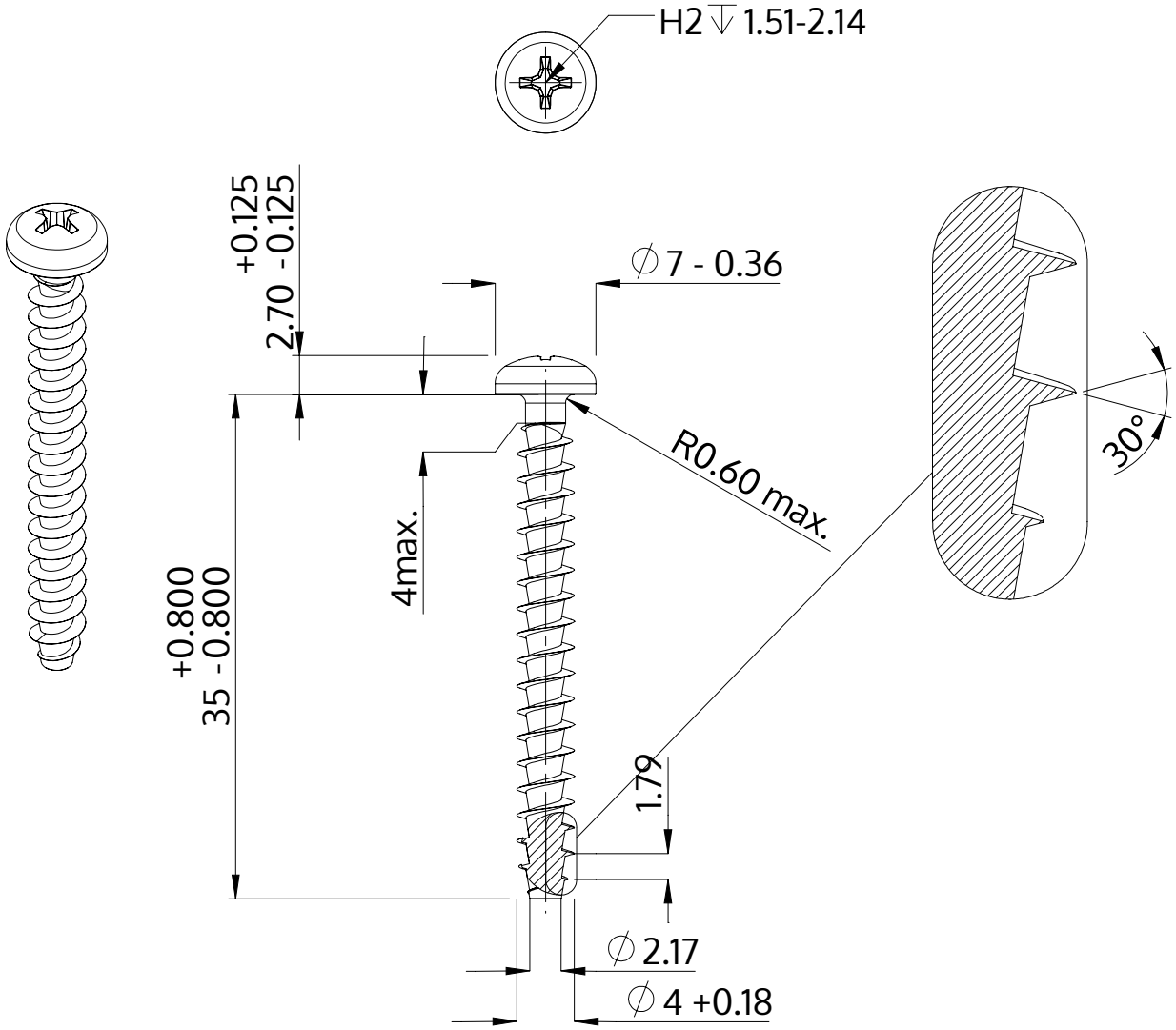

Description	STP32A 4.0x35.0 - H2
Material	stainless-steel A2
Surface	bright, pickled and passivated
Weight	2.206 kg / 1000 pieces

SCREWERK	**STP32A0400350E**	
Metric Drawing A4	Scale 2:1	2024-10