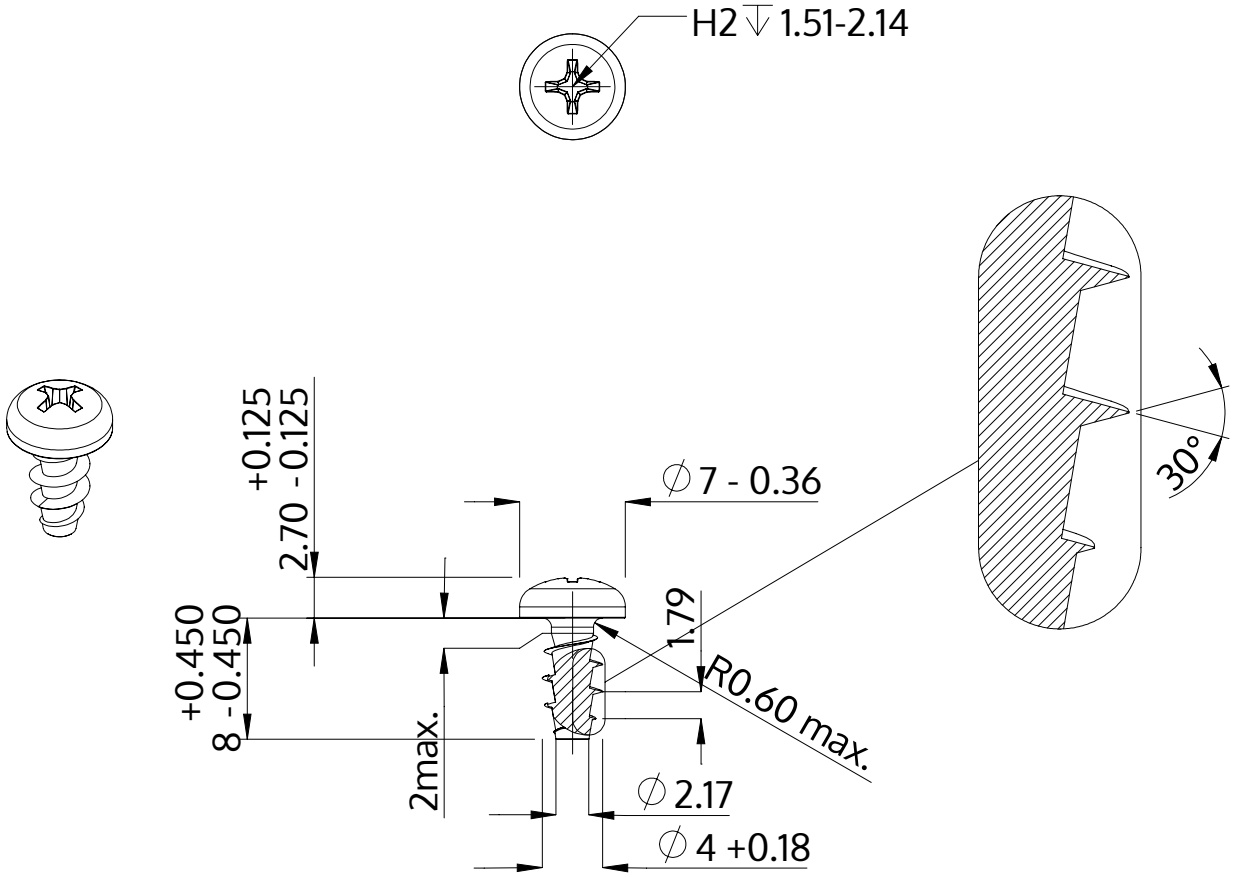

Description	STP32A 4.0x8.0 - H2
Material	stainless-steel A2
Surface	bright, pickled and passivated
Weight	0.902 kg / 1000 pieces

SCREWERK	**STP32A0400080E**	
Metric Drawing A4	Scale None:1	2024-04