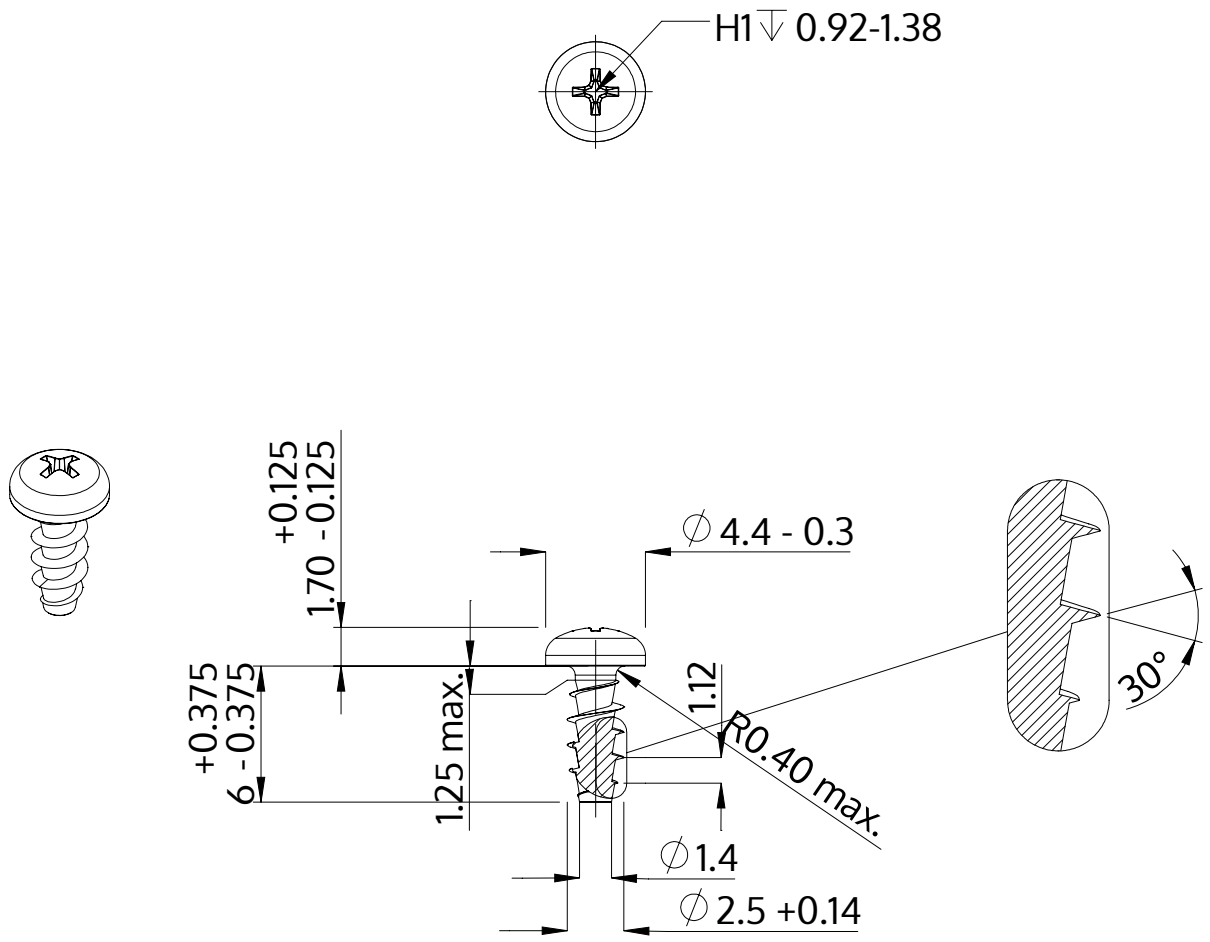

Description	STP32A 2.5x6.0 - H1
Material	stainless-steel A2
Surface	bright, pickled and passivated
Weight	0.243 kg / 1000 pieces

SCREWERK	**STP32A0250060E**	
Metric Drawing A4	Scale 3:1	2024-10