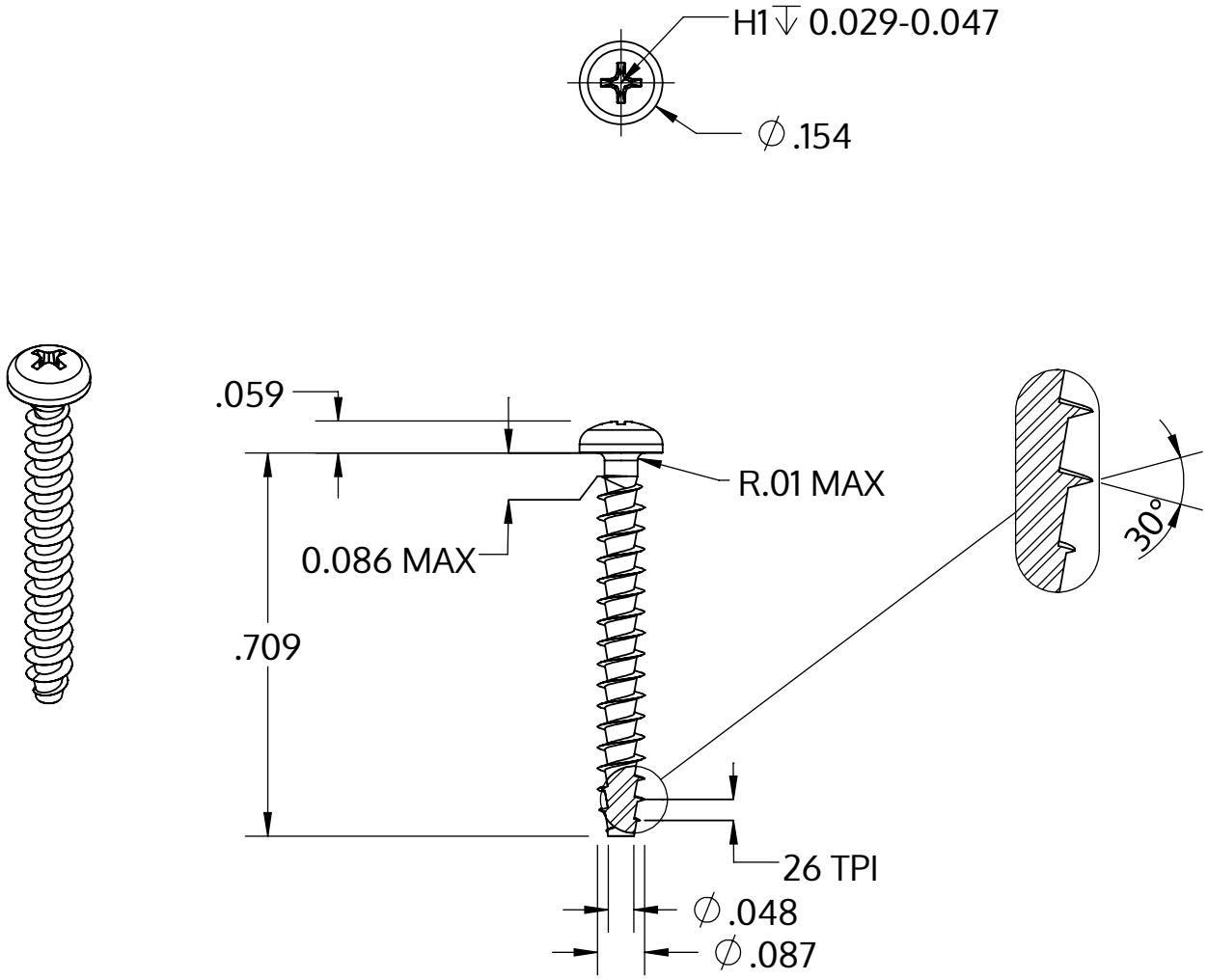

Metric size	M2.2 x 0.98 mm
US size (converted)	#0.086-26
	Tolerances [inch]
Length	+/- 0.021
Head diameter	+0 / -0.011
Head height	+/- 0.004
Thread diameter	+0.005 / -0

Description	STP32A 2.2x18.0 - H1
Material	stainless-steel A2
Surface	bright, pickled and passivated
Weight	0.376 kg / 1000 pieces

SCREWERK	**STP32A0220180E**	
Inch Drawing Size A	Scale 3:1	2024-10