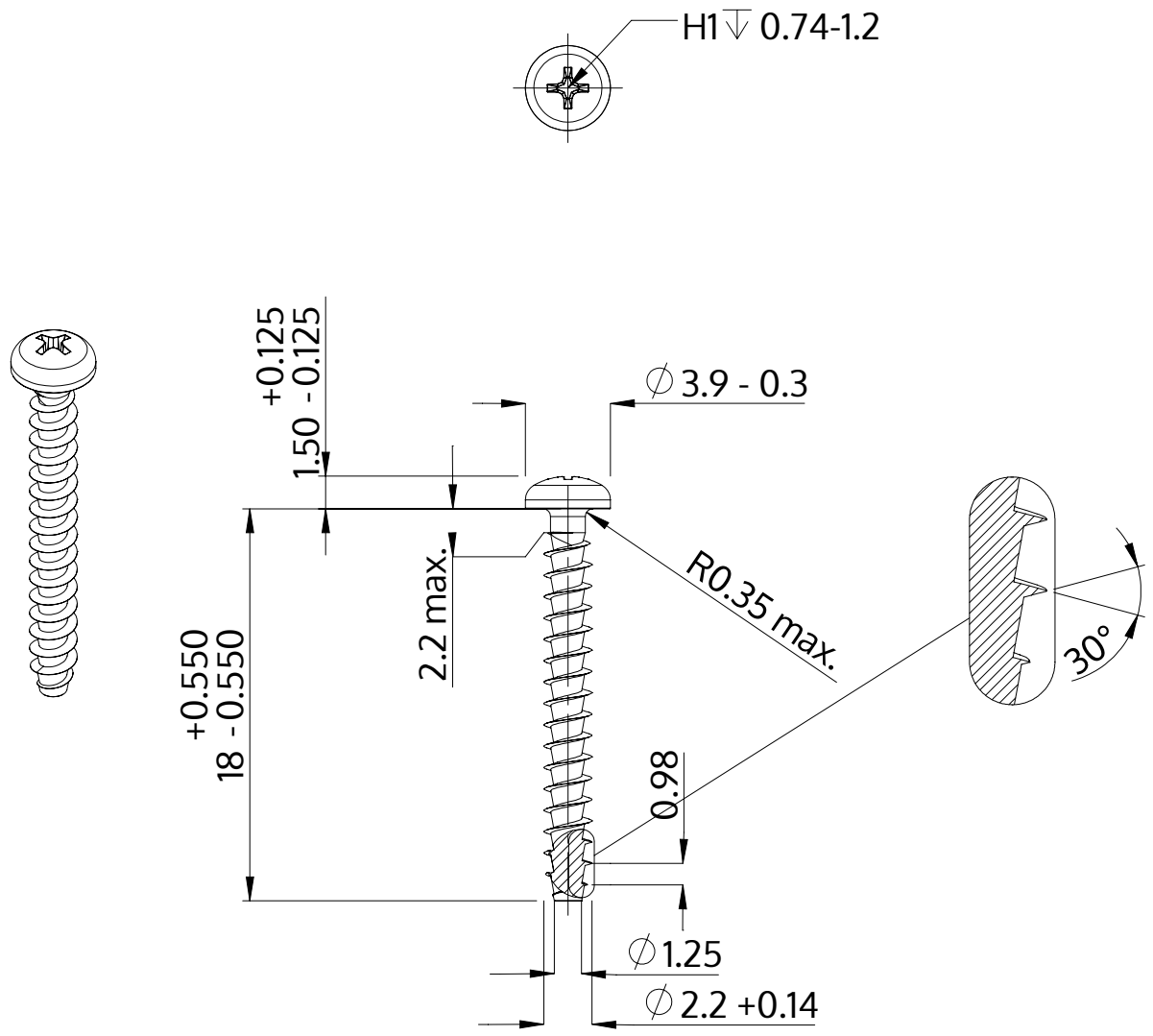


| | |
|---|---|
| Description | STP32A 2.2x18.0 - H1 |
| Material | stainless-steel A2 |
| Surface | bright, pickled and passivated |
| Weight | 0.376 kg / 1000 pieces |

| | | |
|---|---|---|
| SCREWERK | **STP32A0220180E** | |
| Metric Drawing A4 | Scale 3:1 | 2024-10 |