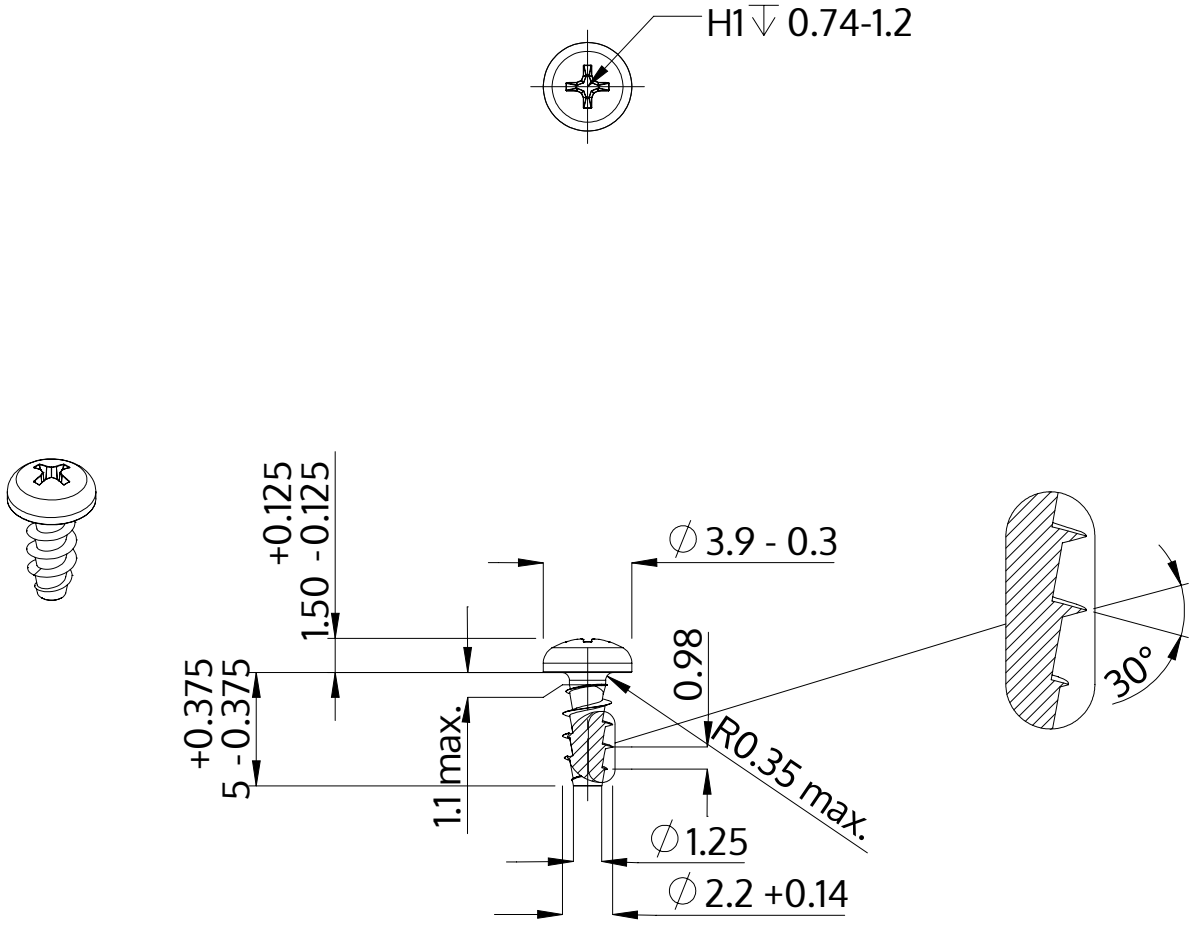

Description	STP32A 2.2x5.0 - H1
Material	stainless-steel A2
Surface	bright, pickled and passivated
Weight	0.169 kg / 1000 pieces

SCREWERK	**STP32A0220050E**	
Metric Drawing A4	Scale 3:1	2024-10